Distributed by:

Tri-Canada

7033 Telford Way #20, Mississauga, ON L5S 1V4
Tel: **905.677.9000** • Toll Free: **1.800.486.7863**
www.tricanada.com

GEMÜ®

VALVES, MEASUREMENT AND CONTROL SYSTEMS

B600 Tank Valves
in Stainless Steel

Leading the world in pharmaceutical and biotechnology industry sterilisation processes

GEMÜ is one of the leading manufacturers of valves, measurement and control systems for sterile applications in the pharmaceutical and biotechnology industries. This position is based on GEMÜ's comprehensive investments in application-oriented research & development, amounting to more than 5% of the company's turnover. The versatile product range is supplemented with a wide range of advisory services provided by industry specialists and application experts.

Customized solutions for your project business

GEMÜ provides the optimal solution from a single source. As a system supplier of isolation, actuator and control technology, we can respond very flexibly to your individual project-specific needs.

Our worldwide sales network provides fast reaction times, customer oriented service and a committed project management team.

Table of contents

Description of use

Today tank valves are available in a large number of versions. They can be installed or welded into the tank cover, tank wall or tank bottom. Their main functions are for filling, sampling and draining the tank contents. Sometimes these functions are combined in one valve for reasons of process safety and sometimes even extra functions are added such as integrated CIP/SIP connections.

All these GEMÜ valves have one thing in common. They are diaphragm valves whose sealing weir is as close as possible to the tank wall to avoid deadlegs in the tank. The internal of the tank bottom valve body has a specially designed cavity which promotes optimum draining of the tank contents and improves their cleanability and sterilisation. Only this cavity ensures optimised draining of the tank.

Features

- *Being very compact, the tank valves are ideal for applications where space is at a premium*
- *Minimal deadlegs and optimized draining capabilities*
- *The valve body is machined from a single piece of block material (monoblock – no welded components)*
- *CIP/SIP capable and sterilisable*
- *The internal surface contour of the valve body is available mechanically and/or electropolished down to Ra 0.25 µm*
- *Optimised flow geometry*
- *Pipe connections such as butt weld spigots, clamps and threaded connections are available in accordance with industrial standards*
- *Valve body materials are 1.4435/316L, other alloys are available to customer specification or test requirements*
- *Welding into the tank bottom is simplified by a welding neck (standard 6 mm)*
- *Available with manual, pneumatic or motorized operators from the GEMÜ modular system*
- *Optical and/or electrical position indicators are available as actuator instrumentation*

B600 tank valves
Overview of applications

CIP/SIP of the tank outlet

Tank bottom valve with welded on or integrated diaphragm valve.
The welded on diaphragm valve is turned for optimized draining, if technically possible.

For design examples see pages 8-9.

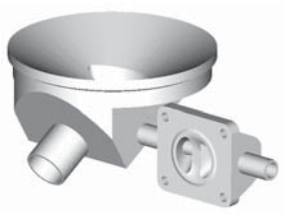

CIP/SIP of the tank or direct sampling from the tank

Tank bottom valve with welded on or integrated diaphragm valve. The welded on diaphragm valve is turned for optimized draining, if technically possible.

For design examples see pages 10-11.

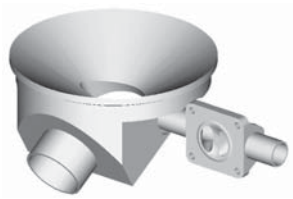

Venting valve

Tank valve with vertical outlet spigot.Available with additional welded on or integrated diaphragm valve depending on the version. The welded on diaphragm valve is turned for optimized draining, if technically possible.

For design examples see pages 12-13.

Tank outlet as ring main

Tank bottom valve with two outlet spigots for simple integration into a ring main.

For design examples see page 14.

Sterile sampling

Tank valve with intergrated sampling option. Also available with integrated CIP/SIP function.

For design examples see pages 15-21.

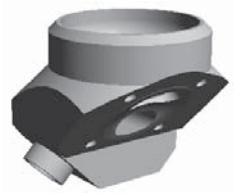

B600 tank valves
Standard version

Diaphragm size 10-100

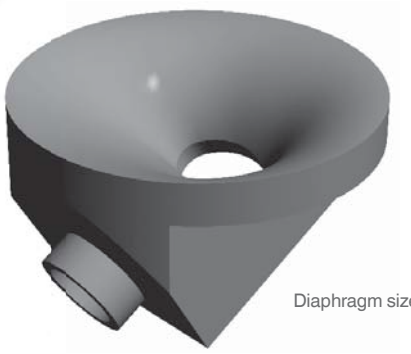

Diaphragm size 8

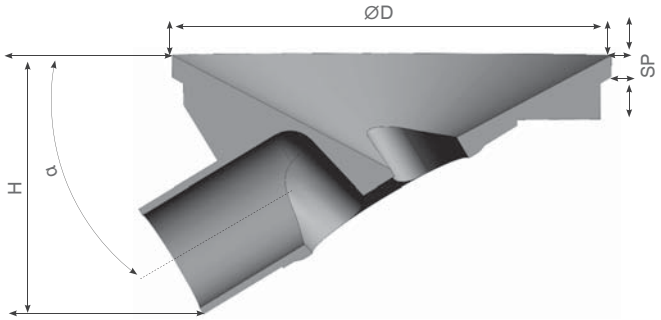

Diaphragm size	D	SP	H	α°
8	Ø 50	6	29	30
10	Ø 85	6	52	25
25	Ø 120	6	70	31
40	Ø 160	6	95	30
50	Ø 180	6	105	33
80	Ø 250	6	145	33
100	Ø 320	6	210	36

All dimensions in mm

Simple draining/tank bottom valve

Version: Forged design
Application: Pump sump draining

GEMÜ B600 02-01.SK

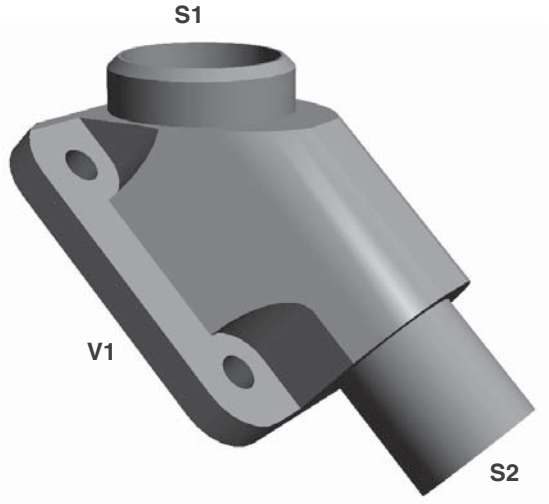

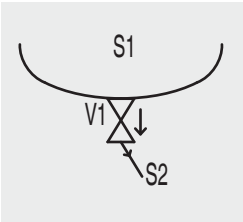

Sectional illustration

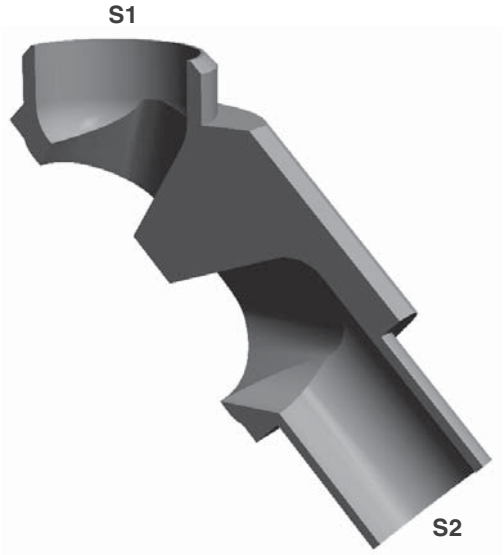

CIP/SIP of the tank outlet

Examples with welded on diaphragm valve

Application: CIP/SIP of the tank outlet
Installation: Tank bottom

GEMÜ B600 03-02.A: Diaphragm valve right, orientation to front

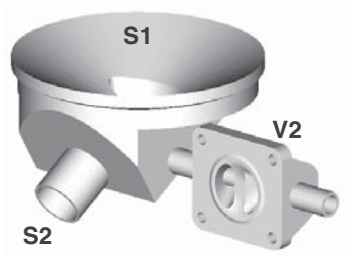

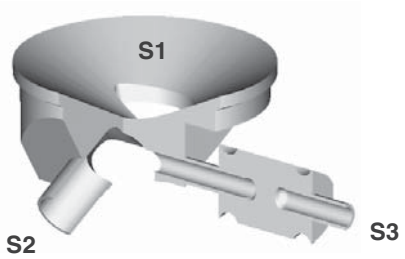

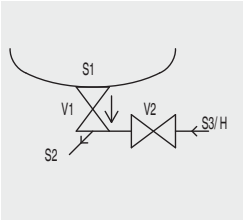

GEMÜ B600 03-02.B: Diaphragm valve left, orientation to front

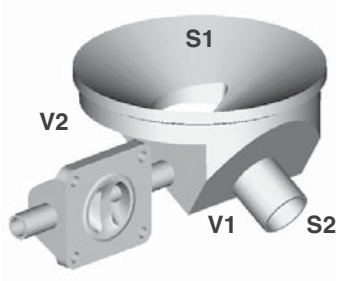

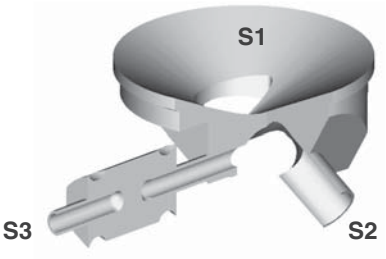

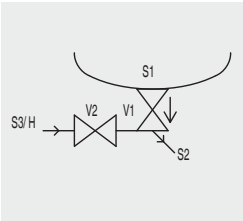

GEMÜ B600 03-02.C: Diaphragm valve right, orientation to back

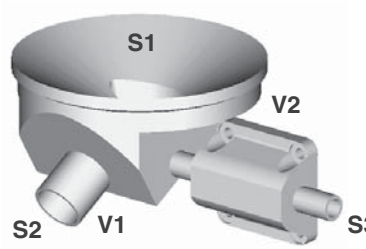

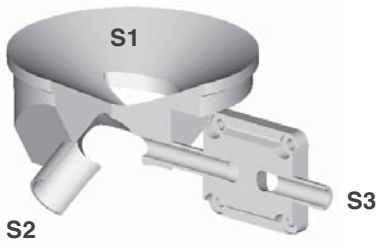

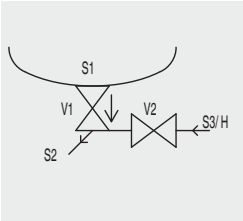

GEMÜ B600 03-02.D: Diaphragm valve left, orientation to back

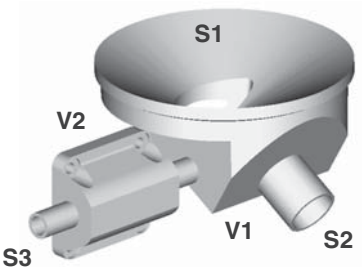

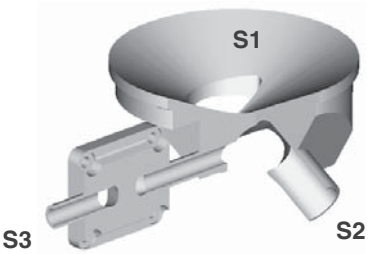

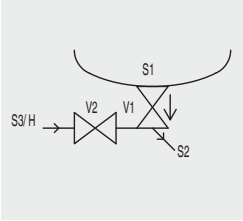

CIP/SIP of the tank outlet

Examples with integrated diaphragm valve

Application: CIP/SIP of the tank outlet
Installation: Tank bottom

GEMÜ B600 03-02.PL

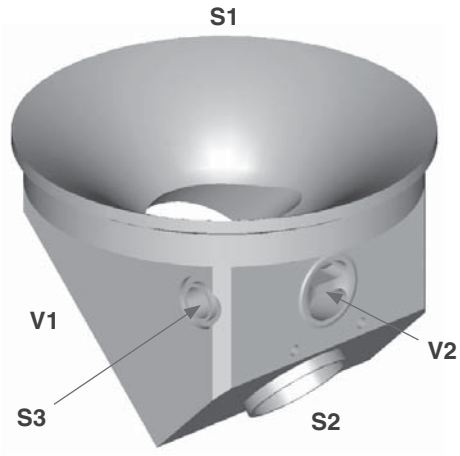

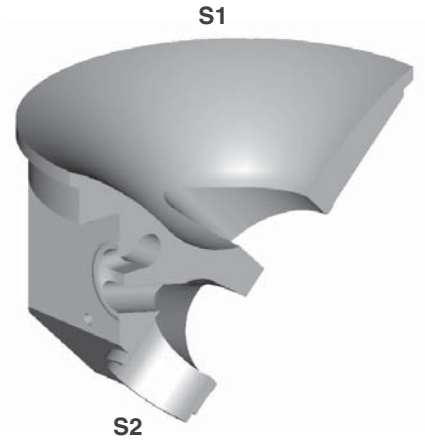

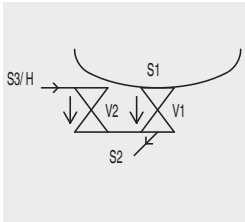

GEMÜ B600 03-02.PR

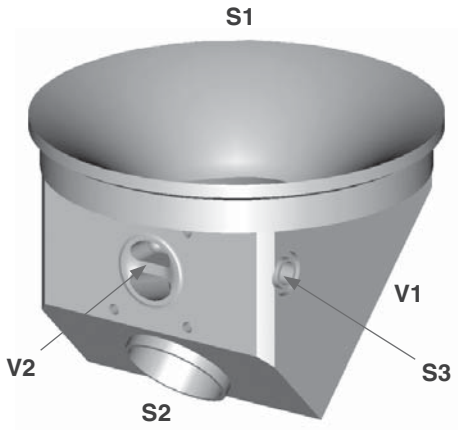

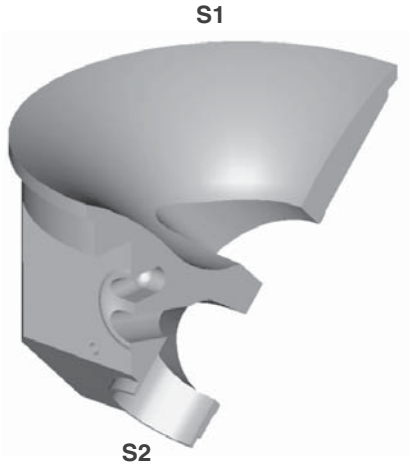

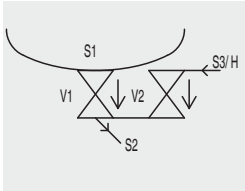

Design for large nominal sizes:
GEMÜ B600 03-02.RR

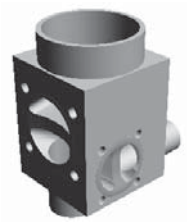

CIP/SIP of the tank

Examples with welded on diaphragm valve

Application: CIP/SIP of the tank or direct sampling from the tank
Installation: Tank bottom

GEMÜ B600 03-02.K: Diaphragm valve right, orientation to front

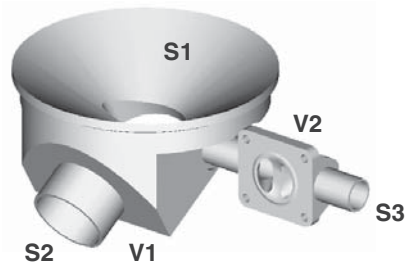

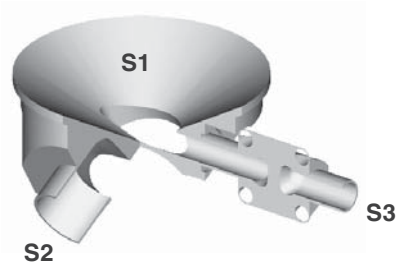

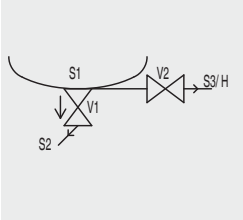

GEMÜ B600 03-02.L: Diaphragm valve left, orientation to front

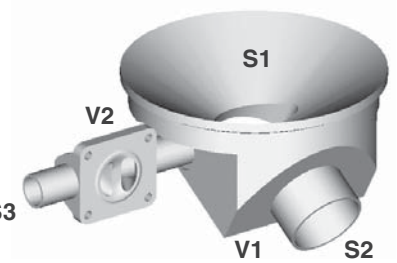

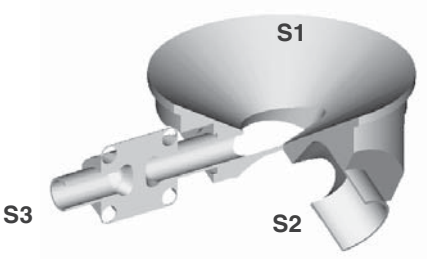

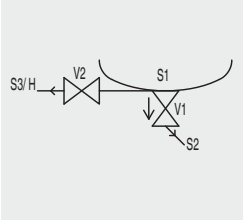

GEMÜ B600 03-02.M: Diaphragm valve right, orientation to back

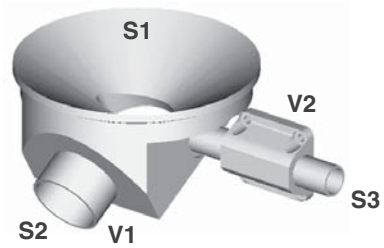

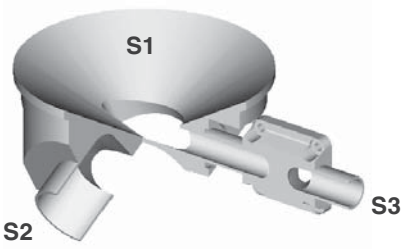

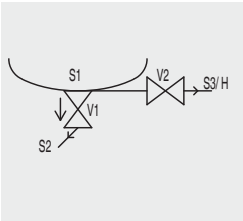

GEMÜ B600 03-02.N: Diaphragm valve left, orientation to back

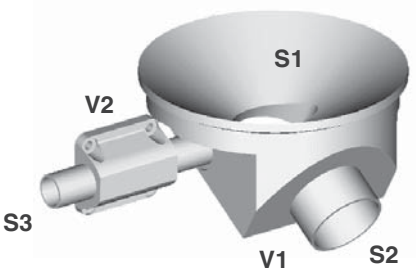

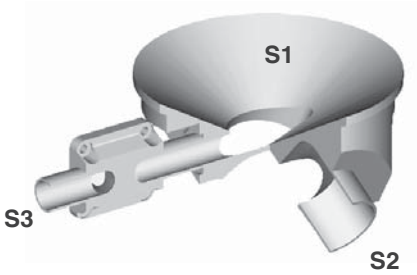

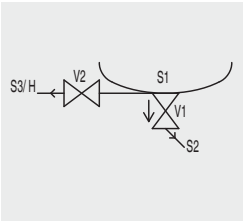

CIP/SIP of the tank

Examples with integrated diaphragm valve

Application: CIP/SIP of the tank or direct sampling from the tank
Installation: Tank bottom

GEMÜ B600 03-02.SL

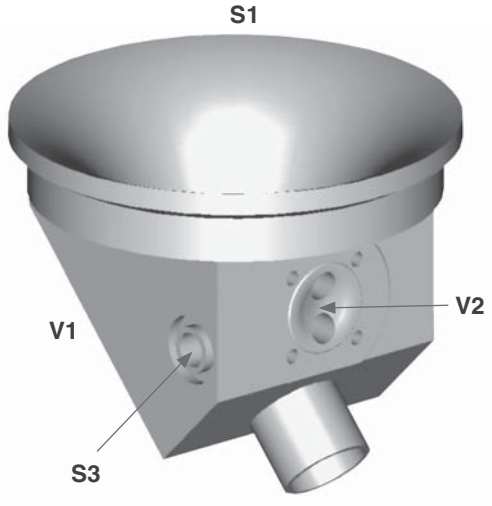

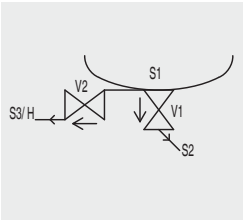

GEMÜ B600 03-02.SR

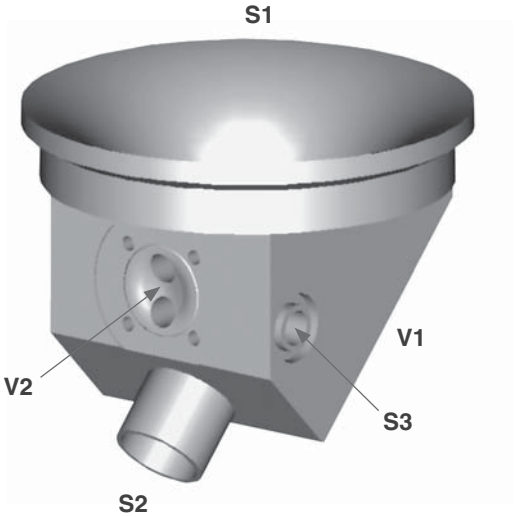

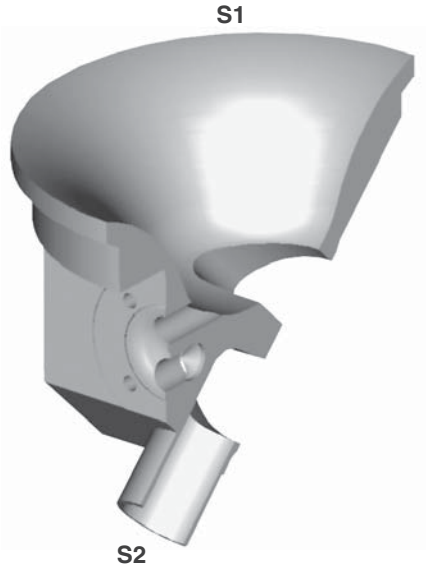

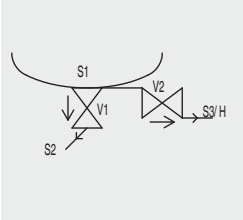

Tank bottom outlet/venting valve
with vertical outlet spigot

Application: Outlet valve at the bottom or venting valve in the tank cover
Installation: Tank bottom, tank cover

GEMÜ B600 02-01.H

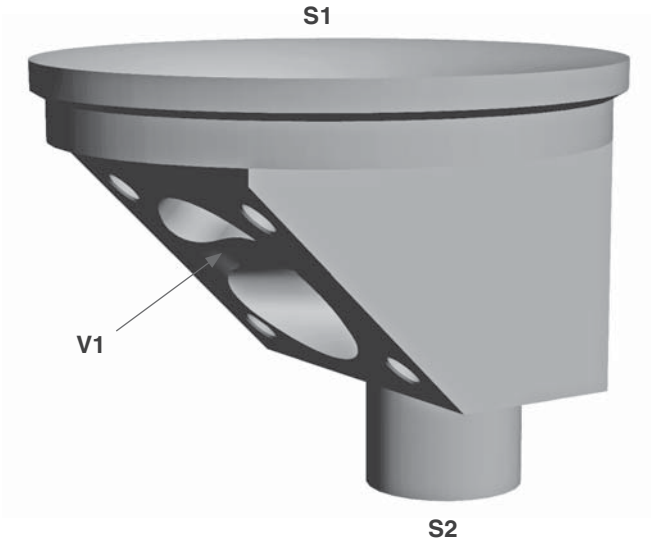

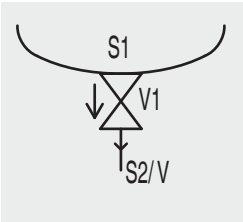

Sectional illustration

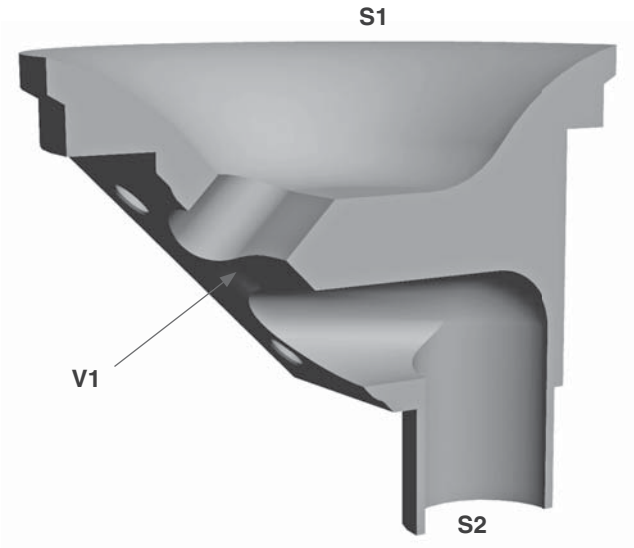

Alternative installation position:

Venting valve
Examples with welded on diaphragm valve

Application: Venting valve in the tank cover with integrated condensate drain or CIP/SIP connection or CIP/SIP of the tank outlet

Installation: Tank cover, tank bottom

GEMÜ B600 03-02.HA: with vertical outlet spigot

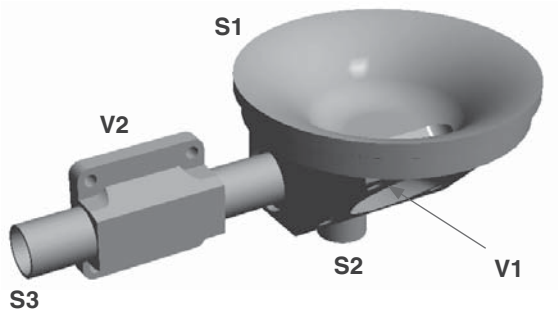

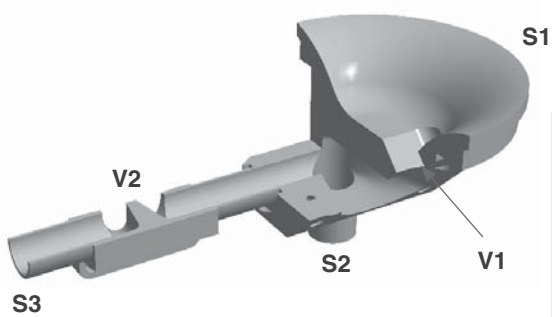

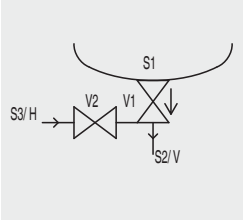

Alternative installation position:

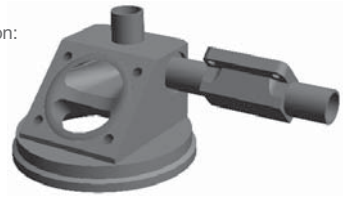

GEMÜ B600 03-02.HB: with vertical outlet spigot

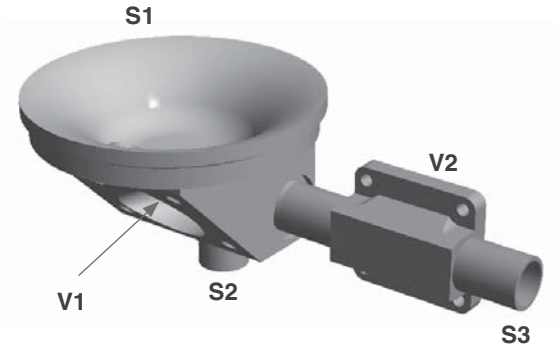

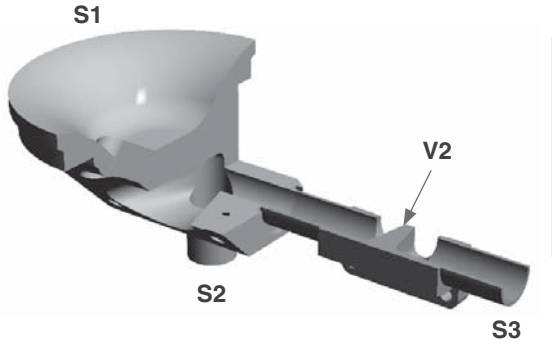

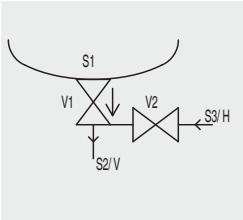

Alternative installation position:

Tank outlet as ring main
with two outlet spigots

Application: Tank outlet which can be integrated into ring main
Installation: Tank bottom

GEMÜ B600 03-01.V: Can be integrated into ring main

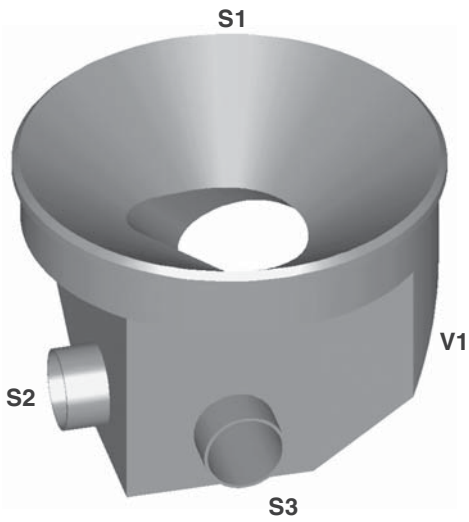

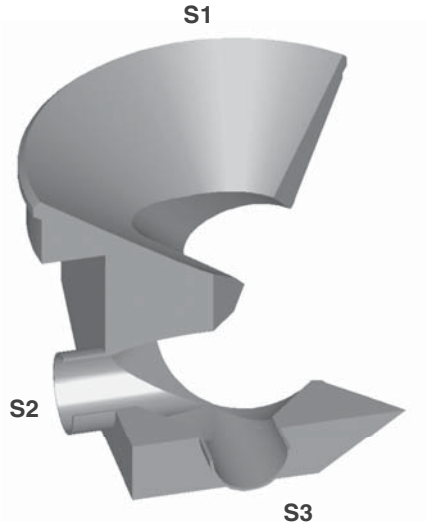

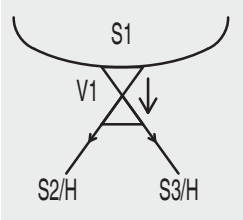

GEMÜ B600 03-01.Y: Ring main directly under the tank

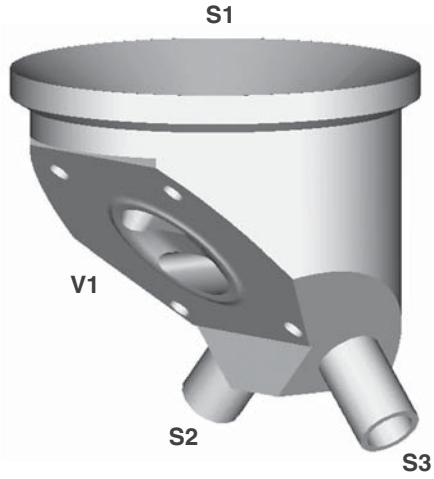

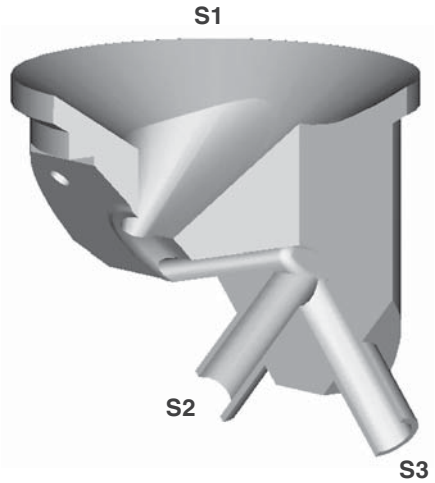

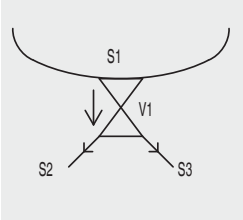

Sterile sampling
from a tank

Application: Sampling with integrated flushing connection
Installation: Tank wall
Restriction: Only diaphragm size 8 and GEMÜ 9601, 9602, 9650, 9654 actuators available.
Max. size of outlets DN 10 acc. to EN ISO 1127.

GEMÜ B600 03-01.Y: Installation suggestion 1

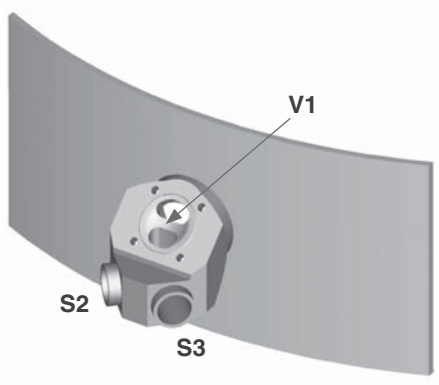

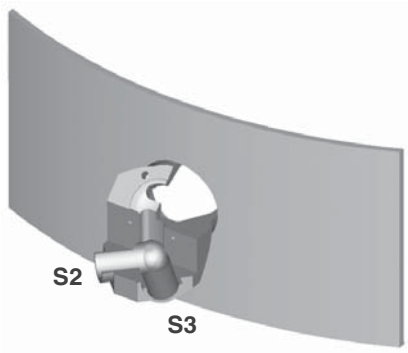

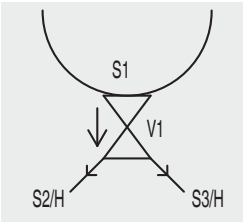

GEMÜ B600 03-01.Y: Installation suggestion 2

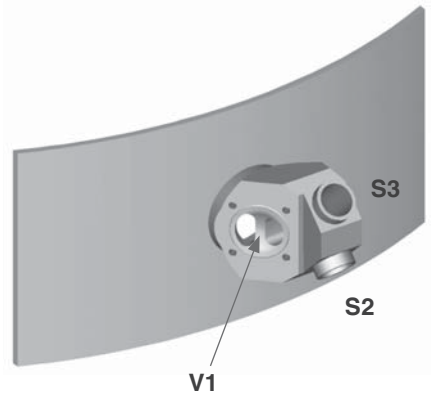

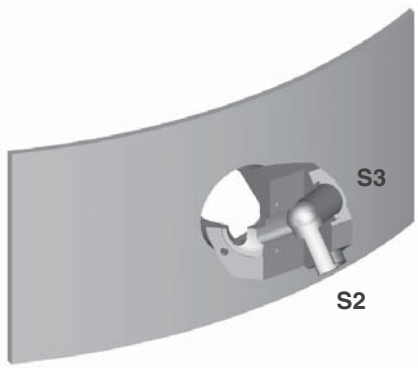

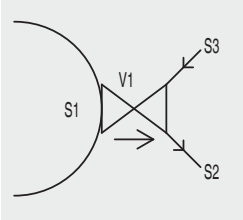

Sterile sampling
from a tank

Application: Sampling with integrated flushing connection
Installation: Tank bottom
Restriction: Only diaphragm size 8 and GEMÜ 9601, 9602, 9650, 9654 actuators available.
Max. size of outlets DN 10 acc. to EN ISO 1127.

GEMÜ B600 03-01.Y1: Flushing connection on the right

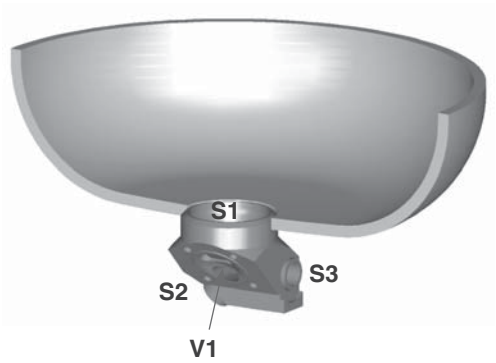

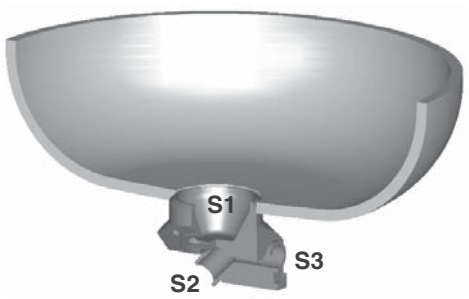

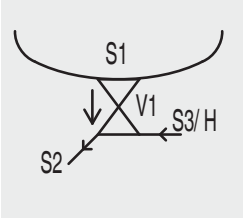

GEMÜ B600 03-01.Y2: Flushing connection on the left

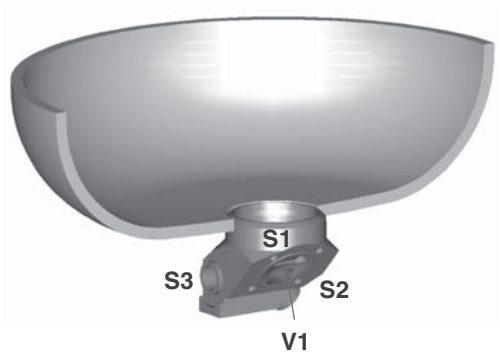

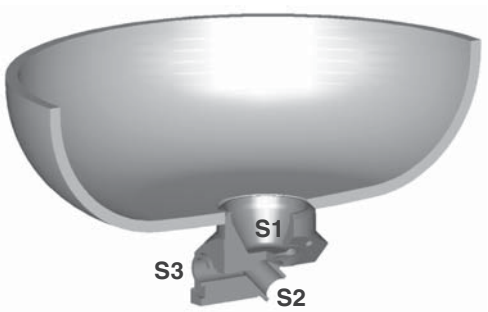

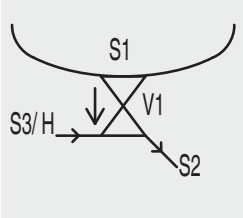

Sterile sampling
Example with integrated diaphragm valve

Application: Sampling with integrated CIP/SIP diaphragm valve
Installation: Tank wall, tank bottom

GEMÜ B600 03-02.PO

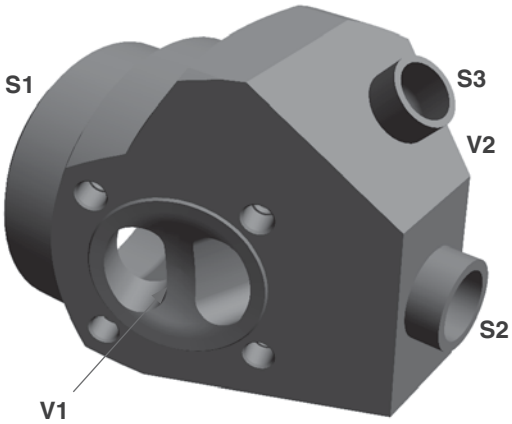

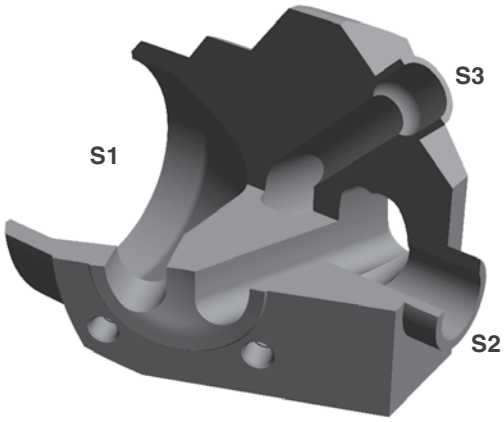

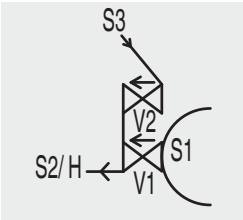

GEMÜ B600 03-02.PU

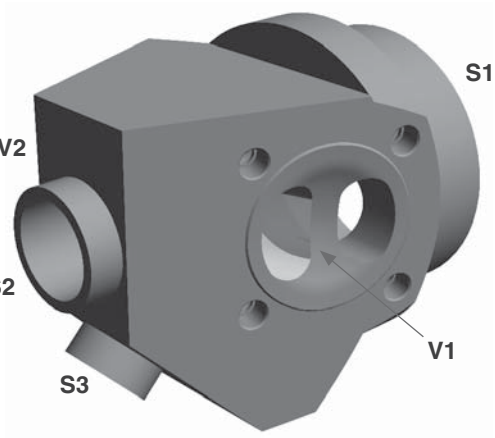

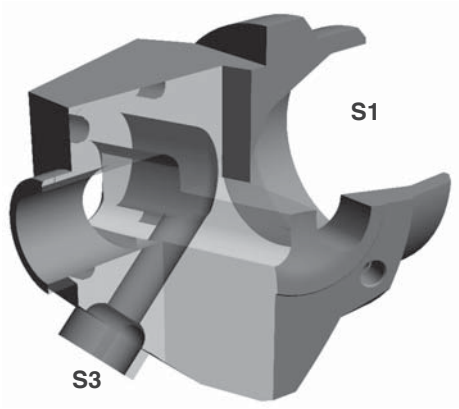

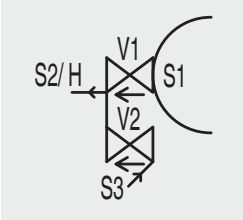

Sterile sampling
from a tank

Application: Sampling from a tank
Installation: Tank bottom, tank wall
Restriction: Only diaphragm size 8 and GEMÜ 9601, 9602, 9650, 9654 actuators available.
Max. size of outlets DN 10 acc. to EN ISO 1127.

GEMÜ B600 02-01.Y1

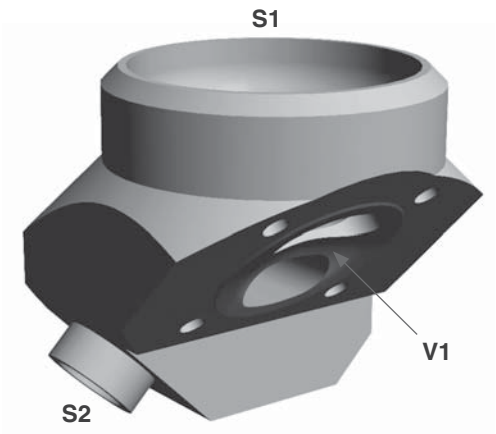

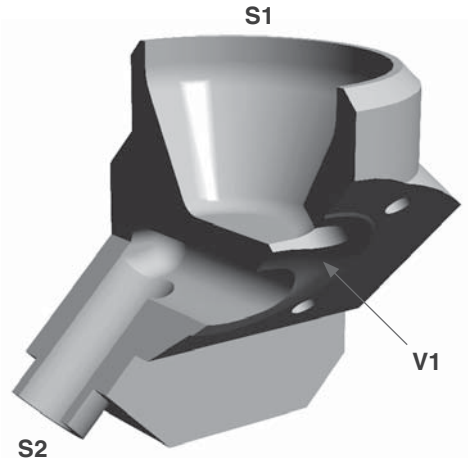

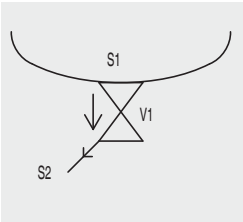

GEMÜ B600 02-01.Y2

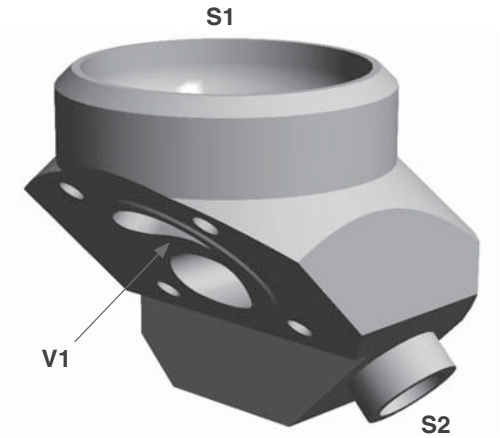

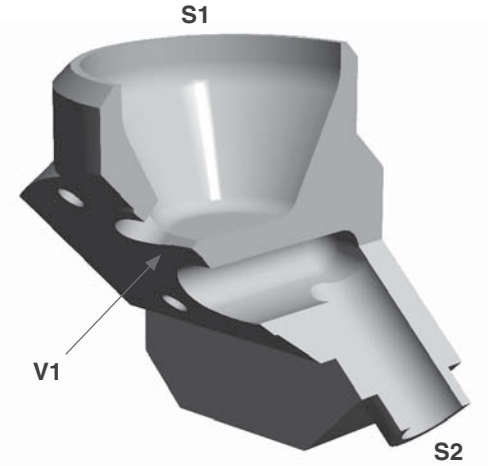

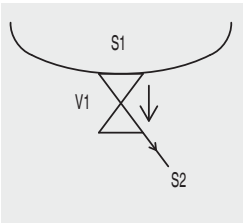

Sterile sampling
from a tank

Application: Sampling from a tank
Installation: Tank wall

GEMÜ B600 02-01.F

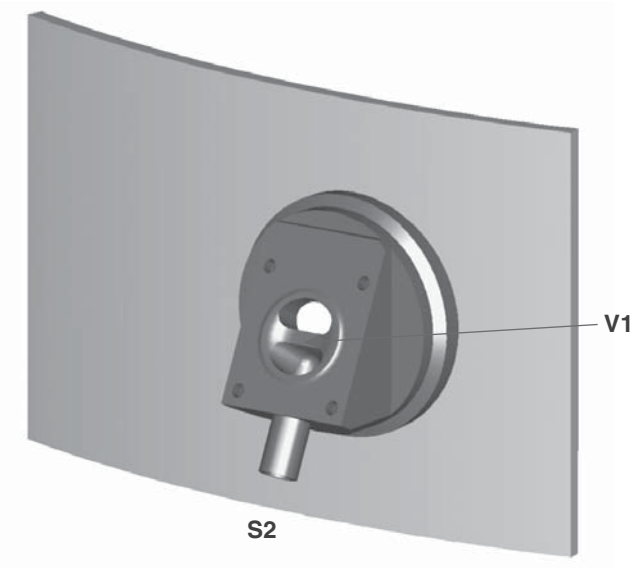

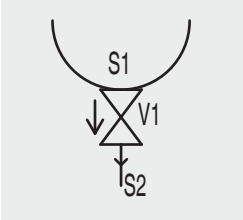

Sectional illustration

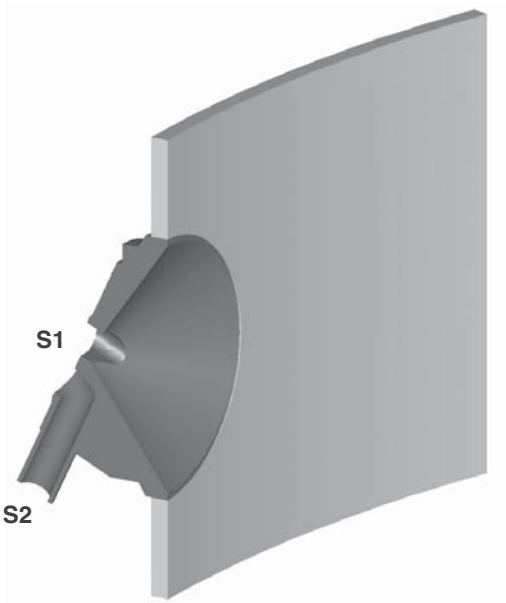

Sterile sampling
Examples with welded on diaphragm valve

Application: Sampling with welded on CIP/SIP diaphragm valve
Installation: Tank wall

GEMÜ B600 03-02.FL

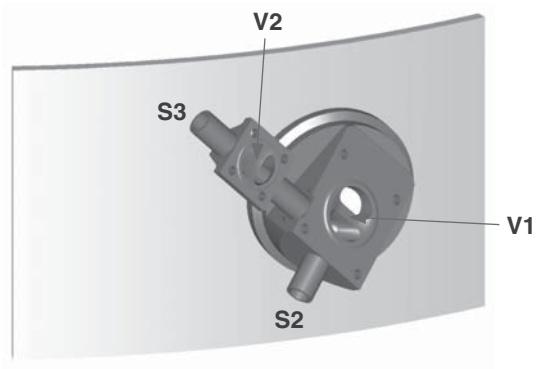

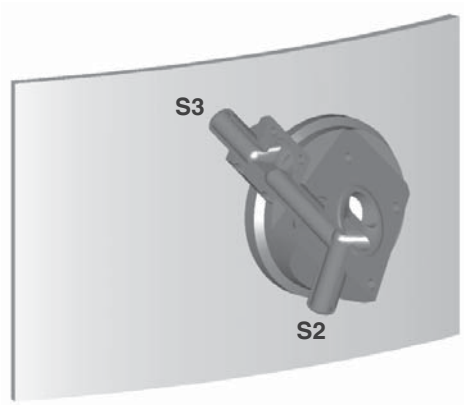

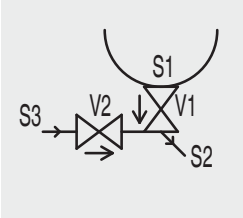

GEMÜ B600 03-02.FR

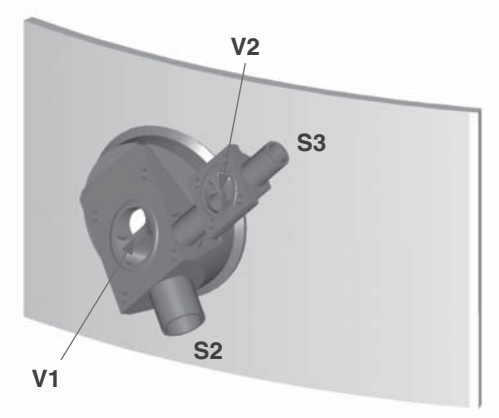

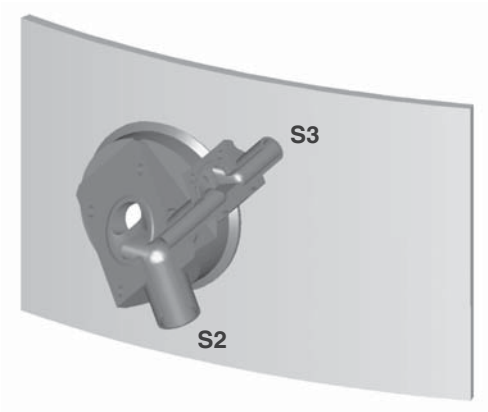

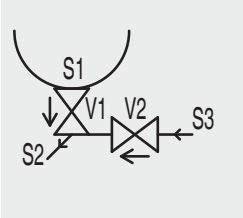

Sterile take-off/sampling
Fixing via clamp connection

Application: Sterile take-off/sampling with integrated clamp connection
Installation: Tank bottom, tank wall
Restriction: Only diaphragm size 8 and GEMÜ 9601, 9602, 9650, 9654 actuators available.
Max. size of outlets DN 10 acc. to EN ISO 1127.

GEMÜ B600 02-01.Y3

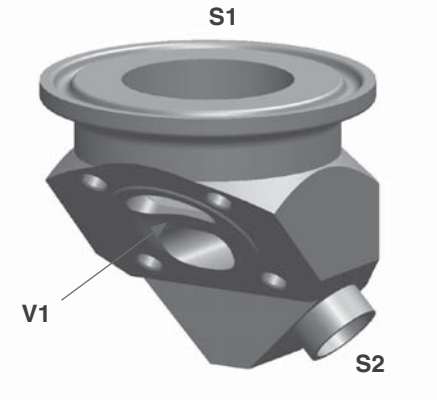

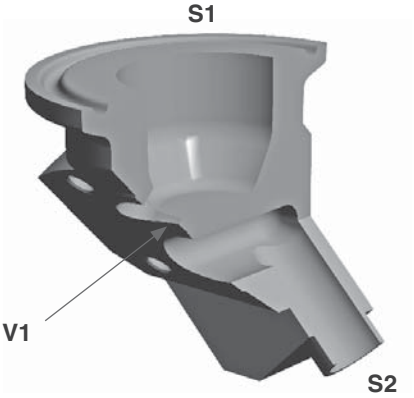

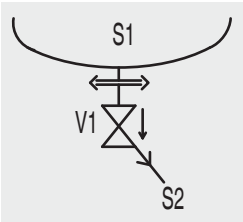

Alternative installation positions:

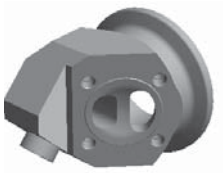

GEMÜ B600 03-01.Y3

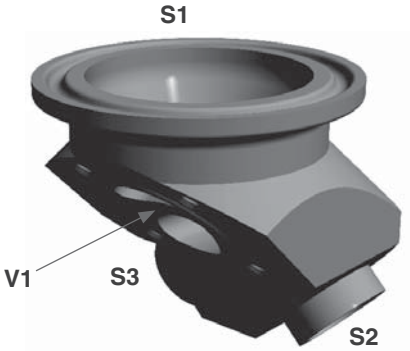

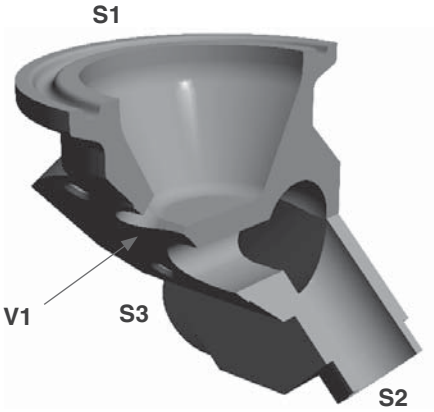

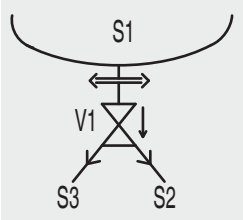

Alternative installation positions:

Tank bottom valve body
with detachable connection

Application: Sterile take-off/sampling with integrated flanged connection
Installation: Tank bottom

GEMÜ B600 02-01.B

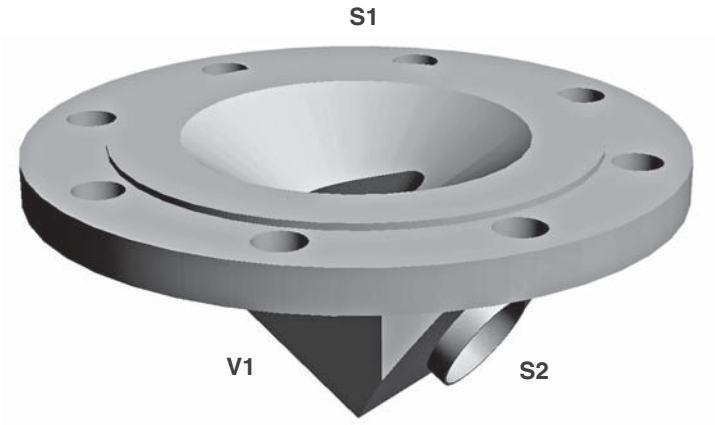

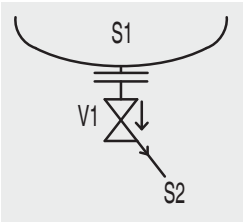

Sectional illustration

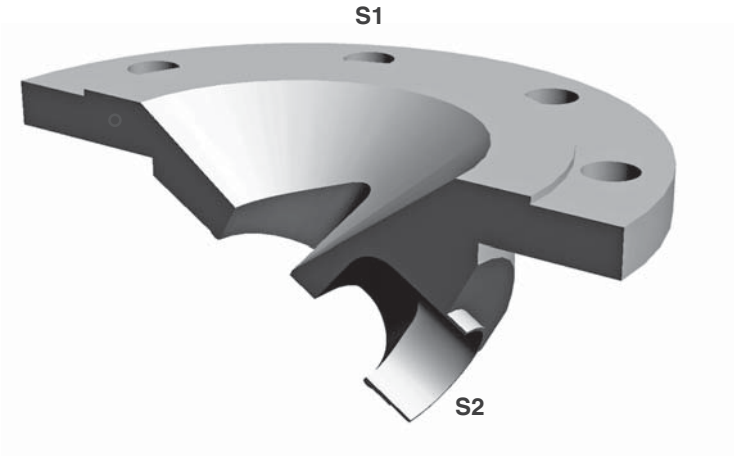

Tank bottom
with integrated agitator connection

Application: Tank bottom outlet with integrated agitator connection (B600 02-01.TB)
or tank bottom outlet with integrated agitator and flushing connection (B600 03-02.TB)

Installation: Tank bottom

GEMÜ B600 02-01.TB

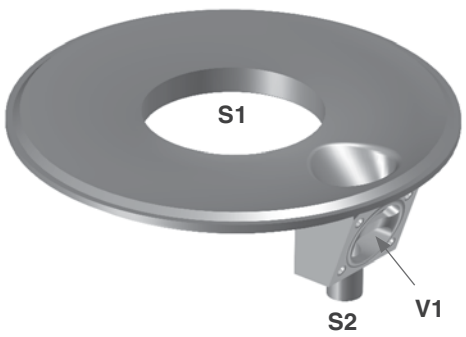

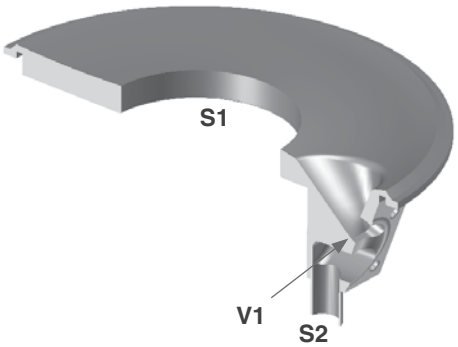

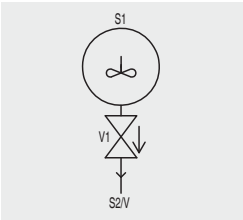

GEMÜ B600 03-02.TB

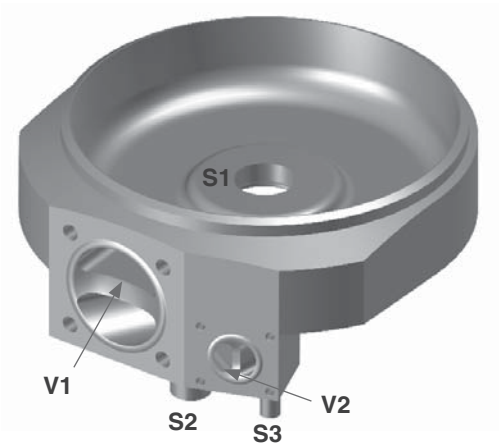

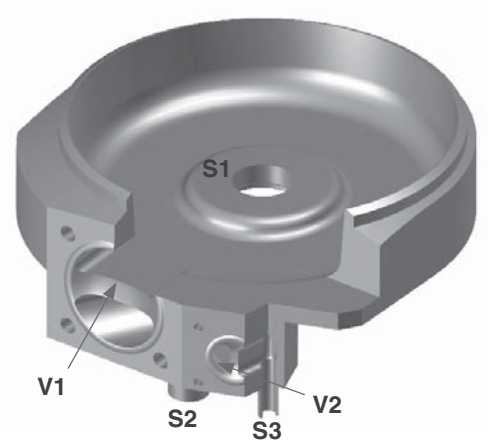

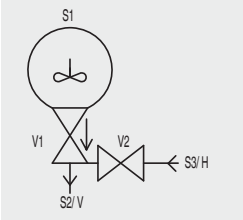

Special applications

GEMÜ B600 07-03.Z

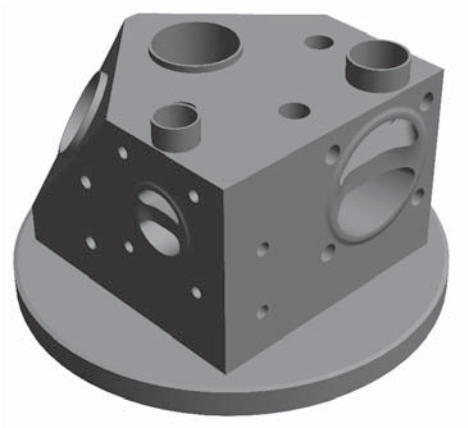

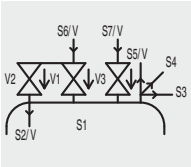

GEMÜ B600 05-06.Z

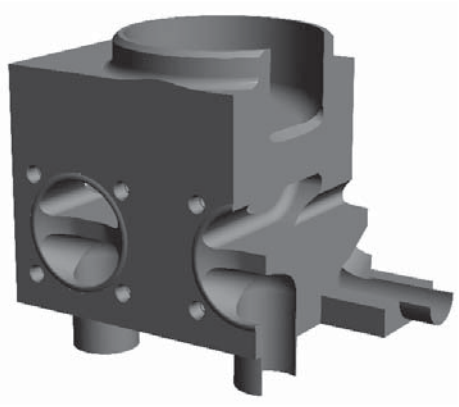

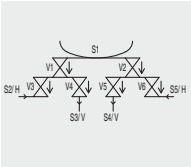

GEMÜ B600 04-04.Z

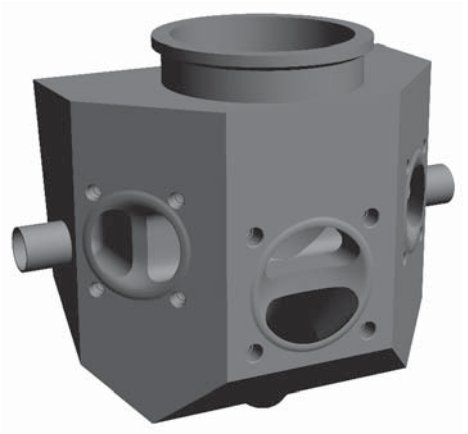

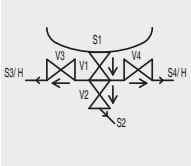

GEMÜ B600 03-03.Z

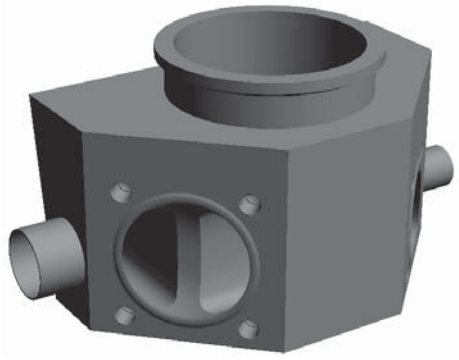

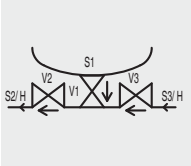

GEMÜ B600 06-04.Z

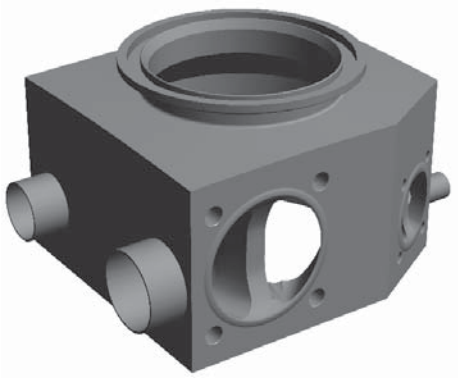

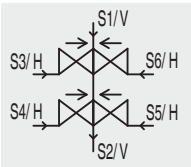

Installation examples

Butt weld connections / Surface finish

Modern, ergonomically shaped workstations and trained polishing staff give us the ability to provide high quality surface finishes. Depending on the required application, surface finishes from Ra 0.8 µm down to 0.25 µm can be achieved by polishing, electro polishing or a special process, we call “elysieren“.

Mechanical hand polishing is carried out at our works to ensure our high quality standard.
In principle, special connections requested by customers can be provided on GEMÜ butt weld spigot bodies and it is also possible to have different connections on one body.

The difference between tube specifications (Example DN 15)

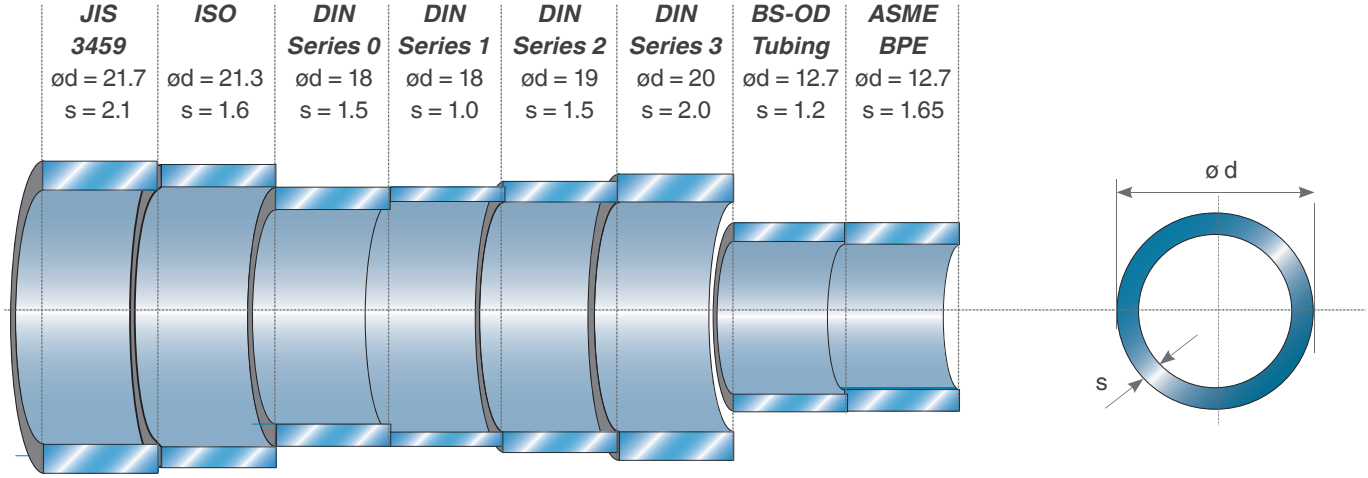

Valve body surface finish, internal contour			
	Forged body - Codes 40, 42 Block material - Codes 41, 43	Investment casting Codes 32, 34	Code
Ra ≤ 0.8 µm, mechanically polished internal, blasted external	X	X	1502
Ra ≤ 0.8 µm, electropolished internal/external	X	-	1503
Ra ≤ 0.6 µm, mechanically polished internal, blasted external	X	X	1507
Ra ≤ 0.6 µm, electropolished internal/external	X	-	1508
Ra ≤ 0.4 µm, mechanically polished internal, blasted external	X	-	1536
Ra ≤ 0.4 µm, electropolished internal/external	X	-	1537
Ra ≤ 0.25 µm, mechanically polished internal, blasted external	X	-	1527
Ra ≤ 0.25 µm, electropolished internal/external	X	-	1516

Ra acc. to DIN 4768; at defined reference points. Surface finish data refers to media wetted surfaces.

Butt weld connections

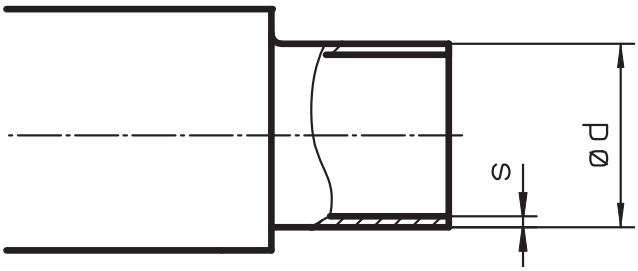

Dimensions in mm			DIN Series 0 Code 0		DIN 11850 Series 1 Code 16		DIN 11850 Series 2 Code 17		DIN 11850 Series 3 Code 18		DIN 11866 Series A Code 1A		DIN 11866 Series B Code 1B		EN ISO 1127 Code 60	
MG	DN	NPS	ød	s	ød	s	ød	s	ød	s	ød	s	ød	s	ød	s
8	4	-	6	1.0	-	-	-	-	-	-	-	-	-	-	-	-
	6	-	8	1.0	-	-	-	-	-	-	8	1.0	10.2	1.6	10.2	1.6
	8	¼"	10	1.0	-	-	-	-	-	-	10	1.0	13.5	1.6	13.5	1.6
	10	⅜"	-	-	12	1.0	13	1.5	14	2.0	13	1.5	-	-	-	-
	15	½"	-	-	-	-	-	-	-	-	-	-	-	-	-	-
10	10	⅜"	-	-	12	1.0	13	1.5	14	2.0	13	1.5	17.2	1.6	17.2	1.6
	15	½"	18	1.5	18	1.0	19	1.5	20	2.0	19	1.5	21.3	1.6	21.3	1.6
	20	¾"	-	-	-	-	-	-	-	-	-	-	-	-	-	-
25	15	½"	18	1.5	18	1.0	19	1.5	20	2.0	19	1.5	21.3	1.6	21.3	1.6
	20	¾"	22	1.5	22	1.0	23	1.5	24	2.0	23	1.5	26.9	1.6	26.9	1.6
	25	1"	28	1.5	28	1.0	29	1.5	30	2.0	29	1.5	33.7	2.0	33.7	2.0
40	32	1 ¼"	34	1.5	34	1.0	35	1.5	36	2.0	35	1.5	42.4	2.0	42.4	2.0
	40	1 ½"	40	1.5	40	1.0	41	1.5	42	2.0	41	1.5	48.3	2.0	48.3	2.0
50	50	2"	52	1.5	52	1.0	53	1.5	54	2.0	53	1.5	60.3	2.0	60.3	2.0
80	65	2 ½"	-	-	-	-	70	2.0	-	-	70	2.0	76.1	2.0	76.1	2.0
	80	3"	-	-	-	-	85	2.0	-	-	85	2.0	88.9	2.3	88.9	2.3
100	100	4"	-	-	-	-	104	2.0	-	-	104	2.0	114.3	2.3	114.3	2.3

MG = diaphragm size

Continued on the next page

Butt weld connections

Dimensions in mm			JIS-G 3447 Code 35		JIS-G 3459 Code 36		SMS 3008 Code 37		BS 4825 Code 55		ASME BPE Code 59		ANSI/ASME B36.19M 10s Code 63		ANSI/ASME B36.19M 40s Code 65	
MG	DN	NPS	ød	s	ød	s	ød	s	ød	s	ød	s	ød	s	ød	s
8	4	-	-	-	-	-	-	-	-	-	-	-	-	-	-	-
	6	-	-	-	10.5	1.20	-	-	-	-	-	-	10.3	1.24	10.3	1.73
	8	¼"	-	-	13.8	1.65	-	-	6.35	1.2	6.35	0.89	13.7	1.65	13.7	2.24
	10	⅜"	-	-	-	-	-	-	9.53	1.2	9.53	0.89	-	-	-	-
	15	½"	-	-	-	-	-	-	12.70	1.2	12.70	1.65	-	-	-	-
10	10	⅜"	-	-	17.3	1.65	-	-	9.53	1.2	9.53	0.89	17.1	1.65	17.1	2.31
	15	½"	-	-	21.7	2.10	-	-	12.70	1.2	12.70	1.65	21.3	2.11	21.3	2.77
	20	¾"	-	-	-	-	-	-	19.05	1.2	19.05	1.65	-	-	-	-
25	15	½"	-	-	21.7	2.10	-	-	-	-	-	-	21.3	2.11	21.3	2.77
	20	¾"	-	-	27.2	2.10	-	-	19.05	1.2	19.05	1.65	26.7	2.11	26.7	2.87
	25	1"	25.4	1.2	34.0	2.80	25.0	1.2	-	-	25.40	1.65	33.4	2.77	33.4	3.38
40	32	1 ¼"	31.8	1.2	42.7	2.80	33.7	1.2	-	-	-	-	42.2	2.77	42.2	3.56
	40	1 ½"	38.1	1.2	48.6	2.80	38.0	1.2	-	-	38.10	1.65	48.3	2.77	48.3	3.68
50	50	2"	50.8	1.5	60.5	2.80	51.0	1.2	-	-	50.80	1.65	60.3	2.77	60.3	3.91
80	65	2 ½"	63.5	2.0	76.3	3.00	63.5	1.6	-	-	63.50	1.65	73.0	3.05	73.0	5.16
	80	3"	76.3	2.0	89.1	3.00	76.1	1.6	-	-	76.20	1.65	88.9	3.05	88.9	5.49
100	100	4"	101.6	2.0	114.3	3.00	101.6	2.0	-	-	101.60	2.11	114.3	3.05	114.3	6.02

MG = diaphragm size

Clamp bodies

All clamp connections are machined according to the spigot dimensions e.g. to DIN 11850, EN ISO 1127, SMS 3008 or ASME BPE. We ask our customers to state which version or standard the connections shall comply with.

At GEMÜ all welds are carried out by specially qualified and certified welders utilising state-of-the art welding technology.
In principle, special connections requested by customers can be provided on GEMÜ valve bodies and it is also possible to have different connections on one body. Valve bodies with fully machined clamp connections are also possible as an option.

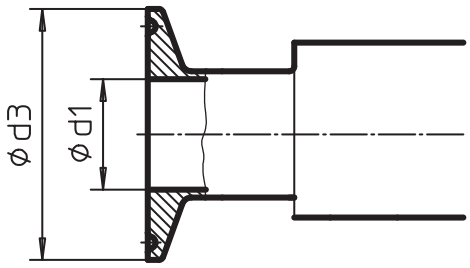

Pipe			Code 59 ASME-BPE		Code 60 EN ISO 1127		Code 59 ASME-BPE		Code 16,17,18 DIN 11850		Code 37 SMS3008		Code 35 JIS-G3447		Code 36 JIS-G3459	
Clamp connection			Code 80		Code 82		Code 88 *		Code 8A		Code 8E		Code 8F		Code 8H	
MG	DN	NPS	ød1	ød3	ød1	ød3	ød1	ød3	ød1	ød3	ød1	ød3	ød1	ød3	ød1	ød3
8	8	¼"	4.57	25	10.30	25.0	-	-	-	-	-	-	-	-	10.5	34
	10	⅜"	7.75	25	-	-	-	-	10.00	34	-	-	-	-	-	-
	15	½"	9.40	25	-	-	9.40	25	-	-	-	-	-	-	-	-
10	10	⅜"	-	-	14.00	25.0	-	-	10.00	34	-	-	-	-	14.00	34
	15	½"	9.40	25	18.10	50.5	9.40	25	16.00	34	-	-	-	-	17.50	34
	20	¾"	15.75	25	-	-	15.75	25	-	-	-	-	-	-	-	-
25	15	½"	9.40	25	18.10	50.5	9.40	25	16.00	34	-	-	-	-	17.50	34
	20	¾"	15.75	25	23.70	50.5	15.75	25	20.00	34	-	-	-	-	-	-
	25	1"	22.10	50.5	29.70	50.5	22.10	50.5	26.00	50.5	22.60	50.5	23.00	50.5	-	-
40	32	1 ¼"	-	-	38.40	64.0	-	-	32.00	50.5	31.30	50.5	29.40	50.5	-	-
	40	1 ½"	34.80	50.5	44.30	64.0	34.80	50.5	38.00	50.5	35.60	50.5	35.70	50.5	-	-
50	50	2"	47.50	64	56.30	77.5	47.50	64	50.00	64	48.60	64	47.80	64	-	-
80	65	2 ½"	60.20	77.5	72.10	91.0	60.20	77.5	66.00	91	60.30	77.5	59.50	77.5	-	-
	80	3"	72.90	91	84.30	106.0	72.90	91	81.00	106	72.90	91	72.30	91	-	-
100	100	4"	97.38	119	109.70	144.5	97.38	119	100.00	119	97.60	119	97.60	119	-	-

Dimensions in mm
MG = diaphragm size
* Code 88 and Code 80 have different lengths

Materials and certificates

Type	Designation of the test certificate in accordance with EN 10204	Content of the certificate	Confirmation of the certificate by
2.1	Certificate of compliance with the order	Confirmation of compliance with the order	the manufacturer
2.2	Test report	Confirmation of compliance with the order with specification of results of non-specific testing	the manufacturer
3.1	Inspection certificate 3.1	Confirmation of compliance with the order with specification of results of specific testing	the manufacturer acceptance officer independent of the production division
3.2	Inspection certificate 3.2	Confirmation of compliance with the order with specification of results of specific testing	the manufacturer acceptance officer independent of the production division and the acceptance officer commissioned by the purchaser or the acceptance officer named in the official regulations

Tank valves are produced at GEMÜ from block material. The most frequently used material is 1.4435 (316L) and 1.4435 BN2 with a ferrite content of < 0.5%. In addition, other common alloys such as 1.4539, Titanium, Alloy 59, Hastelloy C and special alloys are available by agreement.

The table above provides an overview of the possible certificates which are generally available. The type of certificate and its content must be specified exactly before ordering to be able to provide the required documents. Later requests of certificates may not be possible or possible only under certain conditions.

Our specialists are happy to answer any questions you might have.

Certificates
and approvals

There is no universal diaphragm for all applications, hence we use different rubber mixtures and materials for our diaphragms. The different diaphragms have been certified according to their main fields of application so that we can certify conformity with the international regulations and rules below.

FDA (U.S. Food and Drug Administration)

FDA Extraction according to 21CFR 177.2600 for elastomers and 21CFR 177.1550 for PTFE.

USP (United States Pharmacopeia)

An independent institution has tested our diaphragms according to the regulations of the USP Class VI Chapter 87 In-Vitro and Chapter 88 In-Vivo. Furthermore, our diaphragms are free from animal ingredients.

EHEDG

Hygiene standards in the foodstuff and beverage industry are continuously increasing and are approaching those of the pharmaceutical industry in sensitive areas. For this reason, the EHEDG was established some years ago (European Hygienic Engineering and Design Group). GEMÜ was the first diaphragm valve manufacturer worldwide to be granted certification for its diaphragm valve system developed in 1999. The examination took place in 2002.

RoHS

GEMÜ diaphragms comply with the RoHS Directive 2011/65 EC and the WEEE Directive 2002/96 EC.

Pressure Equipment Directive

As all diaphragm valves are pressure bearing components and as the diaphragm is the central sealing element in addition to the valve body, all diaphragms also comply with the European Pressure Equipment Directive 97/23EC Art. 3 § 3. If no original GEMÜ shut-off diaphragms are installed, GEMÜ cannot accept any responsibility.

GOST certificate

GEMÜ diaphragm valves are certified to the Russian GOST and meet the hygienic requirements of the foodstuff industry in Russia.

The original GEMÜ seal system

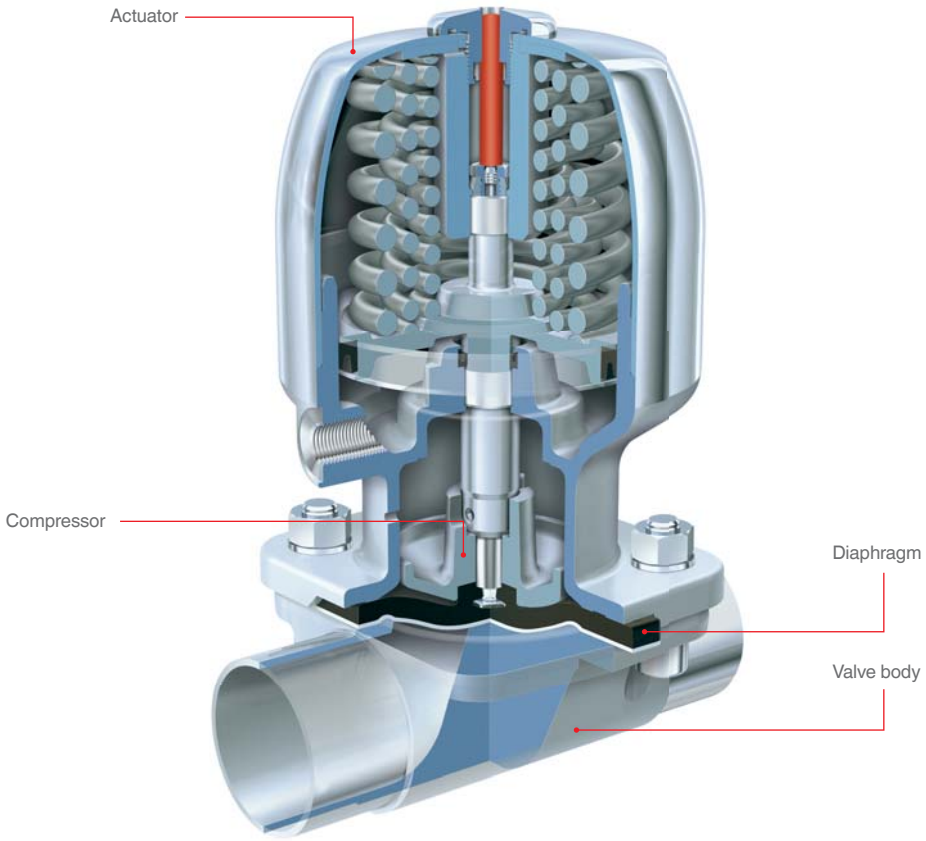

As a recognised diaphragm valve specialist, GEMÜ are familiar with almost all industrial sectors and applications. We are the leading supplier of stainless steel valves for aseptic and sterile applications in the pharmaceutical industry, biotechnology industry, as well as the foodstuff and beverage industries. As well as this, our valves also stand for reliability and a high standard of quality in the chemical and processing industries. The diaphragm, a central sealing element in the piping system is of major importance. Only the diaphragm and the valve body are in contact with the medium. At the same time, they also guarantee external hermetic sealing of the pipeline.

The system is more than the sum of the individual parts

The outstanding characteristics of the diaphragm valve are the result of the perfect interaction of tuned components. These are the valve body, the shut-off diaphragm, the diaphragm fixing, the compressor as well as the actuator. Our many years of experience and intensive dialogue with plant operators has enabled us to continue optimising the diaphragm valve design and its individual components.

Diaphragm and valve body are "inseparable"

GEMÜ valve bodies have a raised circular sealing bead on the inside diameter, in contrast to the valve bodies of other manufacturers. This results in a defined sealing edge. This measure reduces the ring-shaped gap between diaphragm and valve body in the external sealing area. This special feature makes GEMÜ diaphragm valves suitable for sterile applications. We also consider this crucial design and functional characteristic, which was developed by GEMÜ more than three decades ago and constantly refined, during the development of our diaphragms. Only this ensures that our customers can rely on the valve as a complete unit.
GEMÜ diaphragms have been developed, tested, and approved for applications with GEMÜ valve bodies. Therefore GEMÜ do not recommend or guarantee the use of other manufacturers diaphragms with GEMÜ valve bodies. We shall not accept any liability resulting from the use of diaphragms of other manufacturers inside GEMÜ diaphragm valves.

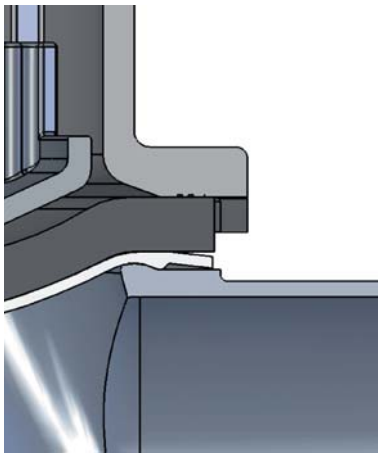

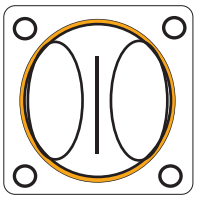

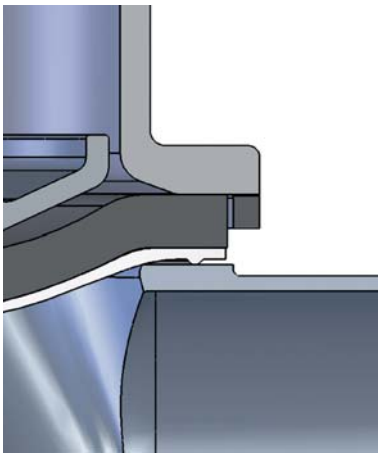

GEMÜ seal system

Conventional seal systems

As a leading manufacturer world-wide we had the GEMÜ diaphragm seal system certified in 2002 and were granted the EHEDG certificate.

Flexible diaphragm fixing

The diaphragm is uniformly fixed in the compressor by means of a threaded pin. The only exception is the smallest diaphragm size (diaphragm size 8), which is pushed in with a rubber pin. The uniform fixing method applies both to soft elastomer and PTFE diaphragms. The largest advantage of fixing by means of a threaded pin, e.g. in comparison to a bayonet fitting, is the even transfer of forces onto the large area of the flanks of the screw thread. This prevents damage to the mechanical connection between compressor and diaphragm especially under vacuum operating conditions. The uniform fixing of elastomer and PTFE diaphragms enables subsequent replacement of the diaphragm while using the same actuator.

Diaphragm size 8

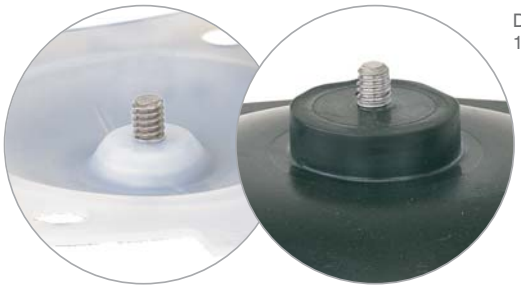

Diaphragm sizes 10 - 100

Selection of diaphragms

Diaphragm	Material/Design	Diaphragm size	Temperature range [°C] Liquid media Min.	Max.	Sterilisation [1]	Code
EPDM	Ethylene-propylene-diene rubber	8 - 100	-10	100	max. 150 °C [2] max. 60 min. per cycle	13/3A
EPDM	Ethylene-propylene-diene rubber	8 - 100	-10	100	max. 150 °C [2] max. 180 min. per cycle	17
PTFE/EPDM	Fully laminated PTFE diaphragm with EPDM back	8, 10, 100	-10	100	max. 150 °C [2], no time limit per cycle	52/5A
PTFE/EPDM	Convex two-piece PTFE diaphragm with loose EPDM back	25, 40, 50, 80	-10	100	max. 150 °C [2], no time limit per cycle	5E

[1] The sterilisation temperature is valid for steam (saturated steam) or superheated water.
[2] If the sterilisation temperatures listed above are applied to the EPDM diaphragms for longer periods of time, the service life of the diaphragms will be reduced. In these cases, maintenance cycles must be adapted accordingly.
This also applies to PTFE diaphragms exposed to high temperature fluctuations.
PTFE diaphragms can also be used as moisture barriers; however, this will reduce their service life. The maintenance cycles must be adapted accordingly.
GEMÜ 555 and 505 globe valves are particularly suitable for use in the area of steam generation and distribution. The following valve arrangement for interfaces between steam pipes and process pipes has proven itself over time: A globe valve for shutting off steam pipes and a diaphragm valve as an interface to the process pipes.

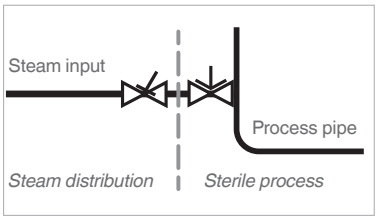

Each application must be analysed before the selection of the diaphragm material. Since the most varied operating conditions often prevail within a plant at different locations, it can be necessary to use different valves and materials. In particular, the chemical characteristics and the temperature of the working media often lead to different interactions. The suitability of the materials used must therefore always be examined individually with regard to the current resistance list or checked by an authorised specialist. Only this procedure guarantees that the application will operate safely and economically for a longer period.
Diaphragms are wearing parts. They need to be regularly inspected and replaced otherwise malfunctions can occur, possibly resulting in hazardous situations. Please note: The maintenance intervals for inspecting and replacing diaphragms are application-dependent. In order to determine a suitable maintenance interval, the maintenance history and the stresses placed on the parts due to frequent sterilisation or frequent cycle duties must be taken into account.

Note

Since plastics and elastomers are subject to natural aging, we recommend observing the GEMÜ storage conditions for shut-off diaphragms. You thereby guarantee maximum storage and service life of the diaphragms.
The temperatures specified above are merely the permissible temperature ranges for the respective diaphragm. The permissible temperature ranges of the valve must always be taken into account for the overall valve design. These can be found in the respective datasheets.
The temperature values are indicated irrespective of operating pressure and diaphragm size and apply to water and/or inert gases. When using water vapour or saturated steam, observe the steam pressure diagram.

Certificates and approvals						
FDA compliant	USP Class VI	EHEDG	TA Luft (German Clean Air Act)	O_2 BAM	**Compatibility with media**	**Special features**
●	●	●	●	●	Very good all-round elastomer, resistant to many acidic and alkaline media, demineralised and deionised hot water, inert and many other industrial gases.	Suitable for vacuum, low gas permeability, applicable for steam sterilisation.
●	●	●	●			Compound and construction of the diaphragm have been specially optimised for steam applications, clearly improved service life.
●	●	●	●	●	Resistant to nearly all chemicals, such as strong acids, alkalis and salts, also at high temperatures, steam, WFI as well as pharmaceuticals. Good resistance to solvents, chlorine, and aromatic hydrocarbons.	Fully laminated diaphragm, can be used in steam. Low gas permeability.
●	●	●	●	●		Convex two-piece diaphragm with loose PTFE face for higher switching cycles, can be used for permanent steam application. Special compounding and production by GEMÜ. Special seal contour for external sealing on the bottom of the diaphragm. Low gas permeability.

EPDM diaphragm dimensions [mm]

MG*	DN	NPS	A	B	C	D	ød	e	h	W	α	β	γ	Y	Number of bolt holes
8	4 - 15	¼" -½"	22	22	31.5	31.5	4.5	4	5.6	-	-	-	-	-	4
10	10 - 20	⅜" - ¾"	39	44	48	53	5.2	5	9	M4	-	-	-	-	4
25	15 - 25	½" - 1"	54	46	71.7	66.7	9	6	8	¼"	-	-	-	-	4
40	32 - 40	1¼" - 1½"	70	65	100	90	11.5	7	8	¼"	-	-	-	-	4
50	50	2"	82	78	124	106	13	7	7	¼"	-	-	-	-	4
80	80	3"	127	114	186	156	18	9	8	5⁄16"	-	-	-	-	4
100	100	4"	194	-	228	-	13	10	9	5⁄16"	28°	42°	40°	-	8

* Diaphragm size
The thread of the diaphragm pin "W" corresponds to Whitworth standard.

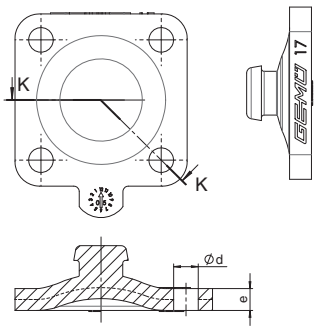

Diaphragm size 8

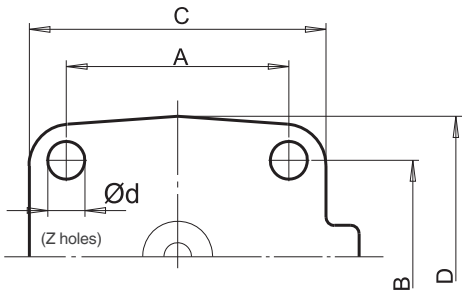

Diaphragm sizes 8 - 80

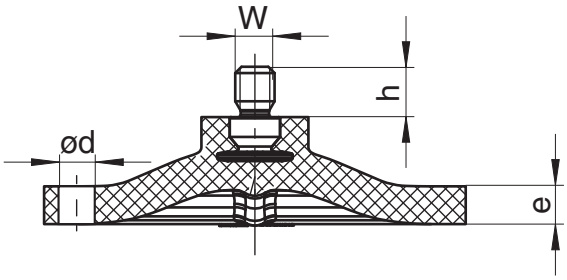

Diaphragm size 10 - 100

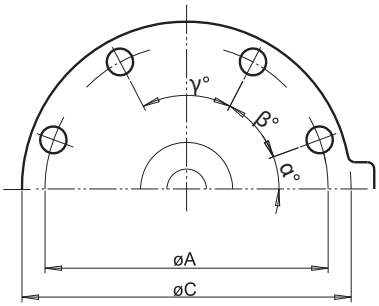

Diaphragm size 100

Selection of operators

	Manually operated					
						
Type	**9601**	**9602**	**9612**	**9673**	**9653**	**9654**
Features	Stainless steel, plastic handwheel, with optical position indicator and seal adjuster	Stainless steel, with optical position indicator and seal adjuster	Stainless steel, plastic handwheel, with optical position indicator and seal adjuster	Stainless steel, plastic handwheel, with optical position indicator and seal adjuster	Stainless steel, plastic handwheel, with optical position indicator, stroke limiter/seal adjuster, lockable, optional: electrical position indicator	Stainless steel, with optical position indicator, stroke limiter/seal adjuster, lockable, optional: electrical position indicator
Autoclavable	●	●	●	●	●	●
Operating temperature*	-10 to 150 °C	-10 to 150 °C	-10 to 150 °C	-10 to 150 °C	-10 to 150 °C	-10 to 150 °C
Operating pressure*	0 to 10 bar	0 to 10 bar	0 to 10 bar	0 to 10 bar	0 to 10 bar	0 to 10 bar
DN	4 - 15	4 - 15	10 - 20	15 - 50	10 - 100	4 - 100
Diaphragm size 8	●	●	-	-	-	●
Diaphragm size 10	-	-	●	-	●	●
Diaphragm size 25	-	-	-	●	●	●
Diaphragm size 40	-	-	-	●	●	●
Diaphragm size 50	-	-	-	●	●	●
Diaphragm size 80	-	-	-	-	●	●
Diaphragm size 100	-	-	-	-	●	●

* max. media temperature, dependent on diaphragm material
** dependent on diaphragm material

Elastomer diaphragms
EPDM

PTFE diaphragms
PTFE/EPDM, PTFE/FPM

Pneumatically operated

9605	9625	9687	9650	9650TL	9651	9658/9688	9660
Plastic, with stainless steel distance piece, optical position indicator	Plastic, with stainless steel distance piece, optical position indicator	Plastic, with stainless steel distance piece	Stainless steel, with optical position indicator, optionally autoclavable	Safety valve, stainless steel, mounting facility for proximity switches	Stainless steel, with integrated automation module	Two stage actuator, stainless steel	Filling valve, stainless steel with optical position indicator
-	-	-	● (DN 4-25)	-	-	-	-
-10 to 150 °C	-10 to 150 °C	-10 to 150 °C	-10 to 150 °C	-10 to 150 °C	-10 to 150 °C	-10 to 150 °C	-10 to 150 °C
0 to 8 bar	0 to 6 bar	0 to 10 bar	0 to 10 bar	0 to 8 bar	0 to 10 bar	0 to 10 bar	0 to 5 bar
4 - 15	10 - 20	10 - 100	4 - 100	4 - 25	4 - 25	10 - 50	4 - 25
●	-	-	●	●	●	●	●
-	●	●	●	●	●	●	●
-	-	●	●	●	●	●	●
-	-	●	●	-	-	●	-
-	-	●	●	-	-	●	-
-	-	●	●	-	-	-	-
-	-	●	●	-	-	-	-

Other valve body versions

2/2-way body
investment casting
2/2-way version to all international standard butt weld connections

2/2-way body
forged version
2/2-way version to all international standard butt weld connections

Other connections

Clamps
to all common standards

Aseptic clamps
to all common standards

Aseptic unions
to all common standards

Aseptic flanges
to all common standards

Other versions, accessories as well as motorized operators available.

Selection of operators

	Motorized	
		
Type	**9618**	**9698**
Features	Plastic, with stainless steel distance piece, optical position indicator	Plastic, with stainless steel distance piece, optical position indicator and manual override
Autoclavable	-	-
Operating temperature*	0 to 130 °C	0 to 150 °C
Operating pressure*	0 to 6 bar	0 to 10 bar
DN	4 - 15	15 - 50
Supply voltage	24 VAC, 120 VAC, 230 VAC, 50/60Hz	24 VAC, 120 VAC, 230 VAC, 50/60Hz
Diaphragm size 8	●	-
Diaphragm size 10	●	-
Diaphragm size 25	-	●
Diaphragm size 40	-	●
Diaphragm size 50	-	●
Diaphragm size 80	-	-
Diaphragm size 100	-	-

* dependent on diaphragm material

Positioners and process controllers
Overview

GEMÜ pneumatic actuators can usually be paired with our electro-pneumatic positioners and process controllers.
In addition to the process parameters and the control system for which a positioner must be suitable, other technical functions and properties also play an important part in the selection of the right positioner.

To make your choice easier, we have placed the four GEMÜ positioners in a comparison based on important features.

Function / Features		GEMÜ 1434 µPos®	GEMÜ 1435 ePos®	GEMÜ 1436 cPos®	GEMÜ 1436 cPos® eco
Controller type	Positioner	●	●	●	●
	Process controller			●	
Operation	Local display / keypad		●	●	
	Status display	●	●	●	●
	Web browser user			●	
	Fieldbus option (Profibus DP, Device Net)			●	
Housing	Plastic	●		●	●
	Aluminium		●		
Functions	Automatic initialisation (Speed^{AP})	●	●	●	●
	Alarm / error outputs		●	●	
	Min/max positions adjustable		●	●	
Mounting	Direct mounting to linear actuators	●	●	●	●
	Remote mounting to linear actuators	●	●	●	●
	Direct mounting to quarter turn actuators		●	●	●
	Remote mounting to quarter turn actuators	●	●	●	●
Control function of valve actuator	Control function 1, normally closed (NC)	●	●	●	●
	Control function 2, normally open (NO)	●	●	●	●
	Control function 3, double acting (DA)		●	●	

Combi switchboxes and electrical position indicators
for pneumatically operated linear valves

Our devices detect the valve stroke in any installation position without play and are tension-free. The sensor base of the GEMÜ 1234,1235, 4222 and 4242 series is positively connected to the valve spindle by means of a preloaded spring so that possible tangential forces of the valve actuator do not negatively affect the position indicator. The position indicators can be quickly and easily assembled and are safe and uncomplicated to handle.

They can be adapted to pneumatic actuators of GEMÜ globe and diaphragm valves. Due to its special design, the GEMÜ 9415 quarter turn actuator may likewise be combined with this type of position indicator.

	Combi switchboxes				Electrical position indicators									
Device type	**4222**	**4242**	**4226**	**4216**	**1234**	**1235/ 1236**	**4242**	**1211**	**1231**	**1215**	**1214**	**1232**	**1201**	**1230**
Valve stroke (in mm)	3 - 30 6 - 50 9 - 75	2 - 30												
Connection	M12				M12			Cable gland			M12 (optional)		Cable gland	M12 (optional)
Programmable	●	●			●	●	●							
With integrated pilot valve	●	●	●	●										
Ex design			●	●				●	●	●				
Fieldbus interface	●	●			●		●				●	●		
Mechanically adjustable (proximity switches)			●	●				●	●		●	●		
Mechanically adjustable (microswitches)													●	●
IO-Link interface		●				●	●							
Optical position indicator (LEDs)	●	●			●	●	●				●	●		●
Optical position indicator (mechanical)										●				
Feedback (OPEN or CLOSED)										●				
Feedback (OPEN and CLOSED)	●	●	●	●	●	●	●	●	●		●	●	●	●

Specification of tank valves

The enormous consequential costs which may be incurred as a result of errors in the planning of production plant more than justify increased planning efforts. Delays and extra costs in validation, late commissioning, contaminated batches, later modifications to the plant are just a few of the points in favour of precise planning.

Good planning of the valve designs begins in the project stage. The implementation of complex process sequences demands a wide variety of compact valve designs. GEMÜ places great emphasis on ensuring you get the optimum tank valve for your specific application and not any standard solution from the catalogue. It is therefore important that you give us all the relevant information in the project phase. The GEMÜ specification sheet is a great help here.

Please use only one form for each tank valve and proceed as follows to fill in the specification:

1. *Enter the operating conditions and desired materials.*
2. *Please state what functions the tank valve should fulfil. Draw a pictogram or functional diagram and insert it in the specification. You can of course use the examples shown in this brochure as a guide.*
3. *Label all connection spigots starting with S1, all valve seats starting with V1.*
4. *Assign the necessary features to every connection in the table and and add explanatory remarks where necessary.*
5. *Specify the necessary operator and type as well as control function for every connection.*
6. *For extra remarks and descriptions, you can use an additional sheet.*

Task no.

B600 tank valves specification

Please complete this form and return it to your nearest GEMÜ office or to the address listed below!

Operating pressure: bar

Medium temperature: ° C

Material of tank valve body:

- 1.4435 ○
- 1.4435 BN 2 (ΔFe < 0,5%) ○
- 1.4539 ○
- Other _____

Tests/Certificates:

- AD 2000 W2 (standard) ◉
- Sonstiges _____

Diaphragm material:

- EPDM Code
- PTFE Code
- Other _____

Surface of tank valve body:

- 1502 (Ra) ≤ 0,8 µm ○
- 1503 (Ra) ≤ 0,8 µm electropolished ○
- 1507 (Ra) ≤ 0,6 µm ○
- 1508 (Ra) ≤ 0,6 µm electropolished ○
- 1536 (Ra) ≤ 0,4 µm ○
- 1537 (Ra) ≤ 0,4 µm electropolished ○
- 1527 (Ra) ≤ 0,25 µm ○
- 1516 (Ra) ≤ 0,25 µm electropolished ○

Quantity: _____

***Example:* B600 03-02.A**

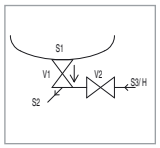

Please draw functional diagram.

Important: Please observe correspondence of table and functional diagram.

Please specify design (e.g. B600 03-02.A):

Tank radius R= mm

Welding neck thickness SP = mm
(Standard 6 mm)

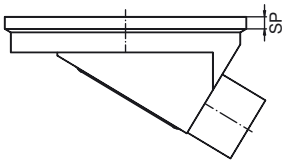

Draining direction: →

Valve seat:

Intersection:

Spigot: S1, S2, ...

Preferred installation position: **H**orizontal/**V**ertical

Flow direction (medium): →

Spigot	Pipe connection				Operator				Other
Spigot no.	DN	Code	ød(a)[mm]	s[mm]	Operator type		Control function	Operator size	Comment/accessories
S1	Welding diameter dependent on type and diaphragm size								
S2					V1				
S3					V2				
S4					V3				
S5					V4				

The technical details of each enquiry must be checked by GEMÜ.

Contact (GEMÜ): _____

Customer: _____

Department: _____

Address: _____

Phone: _____ E-mail: _____

Please do not write here!

K-No.:

P600:

B600:

X:

GEMÜ Gebr. Müller Apparatebau GmbH & Co. KG · Fritz-Müller-Str. 6-8 · D-74653 Ingelfingen-Criesbach · Phone +49(0)7940/123-0 · Fax +49(0)7940/123-224
info@gemue.de · www.gemu-group.com

Distributed by:

Tri-Canada

7033 Telford Way #20, Mississauga, ON L5S 1V4
Tel: **905.677.9000** • Toll Free: **1.800.486.7863**
www.tricanada.com

TÜVRheinland®
CERT
ISO 9001

TÜVRheinland®
CERT
ISO 14001

Subject to alteration · 04/2016 · 88432646

GEMÜ Gebr. Müller Apparatebau GmbH & Co. KG
Fritz-Müller-Straße 6-8 · D-74653 Ingelfingen-Criesbach
Phone +49 (0)7940 123-0 · info@gemue.de

*www.**gemu-group**.com*