Distributed by:

Tri-Canada

1000 Edgeley Blvd. #2, Vaughan, ON L4K 4V4
Tel: **905.677.9000** • Toll Free: **1.800.486.7863**
www.tricanada.com

GEMÜ®

VALVES, MEASUREMENT AND CONTROL SYSTEMS

Stainless Steel Diaphragm Valves
for Aseptic and Sterile Applications

Leading the world in pharmaceutical and biotechnology industry sterilisation processes

GEMÜ is one of the leading manufacturers of valves, measurement and control systems for sterile applications in the pharmaceutical and biotechnology industries. This position is based on GEMÜ's comprehensive investments in application-oriented research & development, amounting to more than 5% of the company's turnover. The versatile product range is supplemented with a wide range of advisory services provided by industry specialists and application experts.

Customized solutions for your project business

GEMÜ provides the optimal solution from a single source. As a system supplier of isolation, actuator and control technology, we can respond very flexibly to your individual project-specific needs.

Our worldwide sales network provides fast reaction times, customer oriented service and a committed project management team.

Table of contents

Diaphragm valves DN 4 - 100
Product overview 4 - 7
Sterile valves in stainless steel –
Health-essential cleanliness 8
T valve bodies made from block material 9
GEMÜ diaphragms 10 - 15
Certificates and approvals 16
Management systems 17
GEMÜ 601
Diaphragm valve, manually operated 18
GEMÜ 602
Diaphragm valve, manually operated 19
GEMÜ 612
Diaphragm valve, manually operated 20
GEMÜ 673
Diaphragm valve, manually operated 21
GEMÜ 673P9
Diaphragm valve, manually operated 22
GEMÜ 653 BioStar®
Diaphragm valve, manually operated 23
GEMÜ 654 BioStar®
Diaphragm valve, manually operated 24
GEMÜ 611
Diaphragm valve, manually operated 25
GEMÜ 671
Diaphragm valve, manually operated 26
GEMÜ 643
Diaphragm valve, manually operated 27
GEMÜ 618
Diaphragm valve, motorized 28
GEMÜ 698
Diaphragm valve, motorized 29
GEMÜ 605
Diaphragm valve, pneumatically operated 30
GEMÜ 615
Diaphragm valve, pneumatically operated 31
GEMÜ 625
Diaphragm valve, pneumatically operated 32
GEMÜ 687
Diaphragm valve, pneumatically operated 33
GEMÜ 695
Diaphragm valve, pneumatically operated 34
GEMÜ 650 BioStar®
Diaphragm valve, pneumatically operated 35
GEMÜ 650TL
Diaphragm valve, manually operated 36
GEMÜ 651
Diaphragm valve, pneumatically operated 37
GEMÜ 658 / GEMÜ 688
Diaphragm valve, pneumatically operated 38
GEMÜ 660
Diaphragm valve, pneumatically operated 39
GEMÜ SUMONDO®
Controllable single-use diaphragm valve 40
Positioners and process controllers 41
Combi switchboxes and electrical position indicators 42
Grades of surface finish 43
Butt weld spigot bodies 44 - 45
Clamp bodies 46
Aseptic clamps 47
Dairy pipe and aseptic unions 48
Aseptic flanges 49
Materials and certificates 50
How to order / Type key 51
Kv value 52 - 53
GEMÜ angle gauge 54
GEMÜ manufacturing sites
and sales locations worldwide 55

Diaphragm valves DN 4 - 100
Product overview

Type	GEMÜ 601	GEMÜ 602	GEMÜ 612	GEMÜ 673	GEMÜ 673P9
Operation	Manual	Manual	Manual	Manual	Manual
Operator	Stainless steel operator top, plastic handwheel, with optical position indicator and seal adjuster	Stainless steel operator top, stainless steel handwheel, with optical position indicator and seal adjuster	Stainless steel operator top, plastic handwheel, with optical position indicator and seal adjuster	Stainless steel operator top, plastic handwheel, with optical position indicator and seal adjuster	Stainless steel operator top, plastic handwheel, with optical position indicator and seal adjuster, special external sealing
DN	4 to 15	4 to 15	10 to 20	15 to 50	4 to 50
Autoclavable	●	●	●	●	●
Operating temperature *	-10 to 150 °C	-10 to 150 °C	-10 to 150 °C	-10 to 150 °C	-10 to 150 °C
Operating pressure *	0 to 10 bar	0 to 10 bar	0 to 10 bar	0 to 10 bar	0 to 10 bar
Voltage	-	-	-	-	-
Diaphragm size 8	●	●	-	-	●
Diaphragm size 10	-	-	●	-	●
Diaphragm size 25	-	-	-	●	●
Diaphragm size 40	-	-	-	●	●
Diaphragm size 50	-	-	-	●	●
Diaphragm size 80	-	-	-	-	-
Diaphragm size 100	-	-	-	-	-

* dependent on diaphragm material, see technical datasheet

Diaphragms

Elastomer diaphragms
EPDM

Valve body versions

2/2-way body
investment casting
2/2-way version to all international standard butt weld connections

2/2-way body
forged version
2/2-way version to all international standard butt weld connections

i-body
2/2-way body with integrated valve seat

Connections

Clamps
to all common standards

Aseptic clamps
to all common standards

Aseptic unions
to all common standards

Aseptic flanges
to all common standards

GEMÜ 653	GEMÜ 654	GEMÜ 611	GEMÜ 671	GEMÜ 618	GEMÜ 698
Manual	Manual	Manual	Manual	Motorized	Motorized
Stainless steel operator top, plastic handwheel, with optical position indicator, stroke limiter/ seal adjuster, lockable, mounting for electrical position indicator	Stainless steel operator top, stainless steel handwheel, with optical position indicator, stroke limiter/seal adjuster, lockable, mounting for electrical position indicator	Plastic operator top, plastic handwheel, with optical position indicator, lockable	Plastic operator top, plastic handwheel, with optical position indicator, optional electrical position indicator, lockable	Plastic operator top with/ without stainless steel distance piece, with optical position indicator	Plastic operator top with stainless steel distance piece, with optical position indicator and manual override
10 to 100	4 to 100	10 to 20	15 to 100	4 to 15	15 to 50
●	●	-	-	-	-
-10 to 150 °C	-10 to 150 °C	-10 to 80 °C	-10 to 80 °C	0 to 130 °C (without distance piece 15 bis 50 °C)	-10 to 150 °C
0 to 10 bar	0 to 10 bar	0 to 10 bar	0 to 10 bar	0 to 6 bar	0 to 10 bar
-	-	-	-	24 VAC, 120 VAC, 230 VAC, 50/60Hz	24 VAC, 120 VAC, 230 VAC, 50/60Hz
-	●	-	-	●	-
●	●	●	-	●	-
●	●	-	●	-	●
●	●	-	●	-	●
●	●	-	●	-	●
●	●	-	●	-	-
●	●	-	●	-	-

PTFE diaphragms
PTFE/EPDM, PTFE/FPM

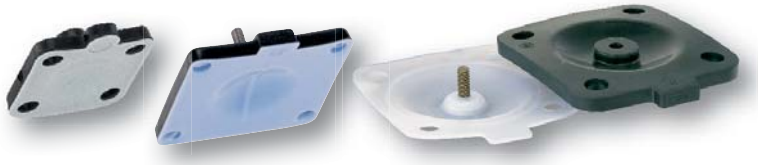

W600
Valve configurations

T valves
e.g. for minimal deadleg ring mains

B600 Tank valves
for stainless steel containers and tanks

M600 Multi-port valve blocks
application-specific

Diaphragm valves DN 4 - 100
Product overview

Type	GEMÜ 605	GEMÜ 615	GEMÜ 625	GEMÜ 687	GEMÜ 695
Operation	Pneumatic	Pneumatic	Pneumatic	Pneumatic	Pneumatic
Operator	Plastic operator top with stainless steel distance piece, with optical position indicator	Plastic operator top, with optical position indicator	Plastic operator top with stainless steel distance piece, with optical position indicator	Plastic operator top with stainless steel distance piece, with optical position indicator	Plastic operator top
DN	4 to 15	10 to 20	10 to 20	10 to 100	15 to 50
Autoclavable	-	-	-	-	-
Operating temperature	-10 to 150 °C	-10 to 80 °C	-10 to 150 °C	-10 to 150 °C	-10 to 80 °C
Operating pressure *	0 to 8 bar	0 to 6 bar	0 to 6 bar	0 to 10 bar	0 to 10 bar
Diaphragm size 8	●	-	-	-	-
Diaphragm size 10	-	●	●	●	-
Diaphragm size 25	-	-	-	●	●
Diaphragm size 40	-	-	-	●	●
Diaphragm size 50	-	-	-	●	●
Diaphragm size 80	-	-	-	●	-
Diaphragm size 100	-	-	-	●	-

* dependent on diaphragm material, see technical datasheet

Diaphragms

Elastomer diaphragms
EPDM

Valve body versions

2/2-way body
investment casting
2/2-way version to all international standard butt weld connections

2/2-way body
forged version
2/2-way version to all international standard butt weld connections

i-body
2/2-way body with integrated valve seat

Connections

Clamps
to all common standards

Aseptic clamps
to all common standards

Aseptic unions
to all common standards

Aseptic flanges
to all common standards

GEMÜ 650	GEMÜ 650TL	GEMÜ 651	GEMÜ 658/688	GEMÜ 660
Pneumatic	Manual / pneumatic	Pneumatic	Pneumatic	Pneumatic
Stainless steel operator top, with optical position indicator, optionally autoclavable	Stainless steel operator top, optical position indicator, automatic closing function	Stainless steel operator top, with integrated automation module	Stainless steel operator top, two-stage actuator	Stainless steel operator top, with optical position indicator, filling valve
4 to 100	4 to 25	4 to 25	10 to 50	4 to 25
● (DN 4 to 25)	-	-	-	-
-10 to 150 °C	-10 to 150 °C	-10 to 150 °C	-10 to 150 °C	-10 to 150 °C
0 to 10 bar	0 to 8 bar	0 to 10 bar	0 to 10 bar	0 to 5 bar
●	●	●	-	●
●	●	●	●	●
●	●	●	●	●
●	-	-	●	-
●	-	-	●	-
●	-	-	-	-
●	-	-	-	-

PTFE diaphragms
PTFE/EPDM, PTFE/FPM

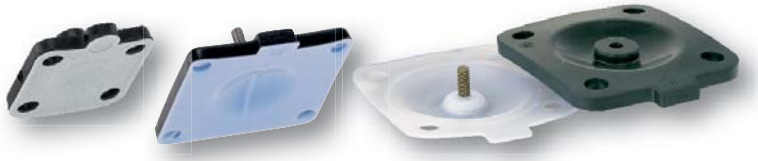

W600
Valve configurations

T valves
e.g. for minimal deadleg ring mains

B600 Tank valves
for stainless steel containers and tanks

M600 Multi-port valves
application-specific

Sterile valves in stainless steel –
Health-essential cleanliness

The purity and quality of our food and medicines have improved tremendously over recent years. In addition to the stricter regulations and approval conditions, GEMÜ has made an important contribution to these developments, too.

Our diaphragm valves find just as much use in yoghurt or toothpaste manufacture as in eye ointment, insulin or monoclonal antibodies production.
Ultra pure media for the semiconductor and microelectronics industries use aseptic stainless steel valves as well as, for example, fine chemicals. Depending on the version selected, the valves are suitable for ultra pure water (WFI), ultra high purity chemicals and intermediate or final products in the pharmaceutical, biotechnology and foodstuffs processing industries. The valve technical design makes them sterilisable and autoclavable. By virtue of being retrofitted with optionally available automation components, GEMÜ diaphragm valves can also perform control tasks. Alongside standard components, GEMÜ additionally offers a variety of customized solutions, such as tank valves, valves for sterile sampling or multi-port valve blocks.

State-of-the-art factory equipment and machinery plus a motivated team ensure the best service. A worldwide network of distributors and an internal sales and logistics network guarantee that products and services reach you quickly and directly. GEMÜ continuously invests in product optimization and new product developments. Continuous dialogue with customers from a wide variety of industrial sectors is one of the factors in developing ideas for application-specific solutions of all types.

T valve bodies made from block material

Description of use

T valve bodies are preferably welded into ring mains with the outlet in a vertical direction. This allows the working medium to be drawn off or fed almost deadleg free.

Features

- *EHEDG-certified GEMÜ seal system*
- *Made from block material, no welds in the media wetted area (reduction of validation times)*
- *Compact design, GMP-compliant design*
- *Grades of surface finish: Internal contour mechanically polished and/or electropolished down to Ra 0.25 µm*
- *Standard valve body material 1.4435 (316L), other materials on request*
- *Fitted with butt weld spigots as standard; clamps, union ends and flanges on request*
- *Available with manual, pneumatic or motorized operators*

T valve bodies for sampling, body version "A"

This particular design is used to take samples from large ring mains (≥ DN 50). A very good deadleg ratio is achieved as a result of the optimized contour. In comparison to the ring main cross section, the outlet branch has a small nominal size (≤ DN 15) and is provided with a diaphragm valve with a diaphragm size of 8 or 10.

Features

- *Cavity fully shaped, deadleg ratio < 1 x D*
- *Compact design*
- *Optimal draining if installed at an angle*

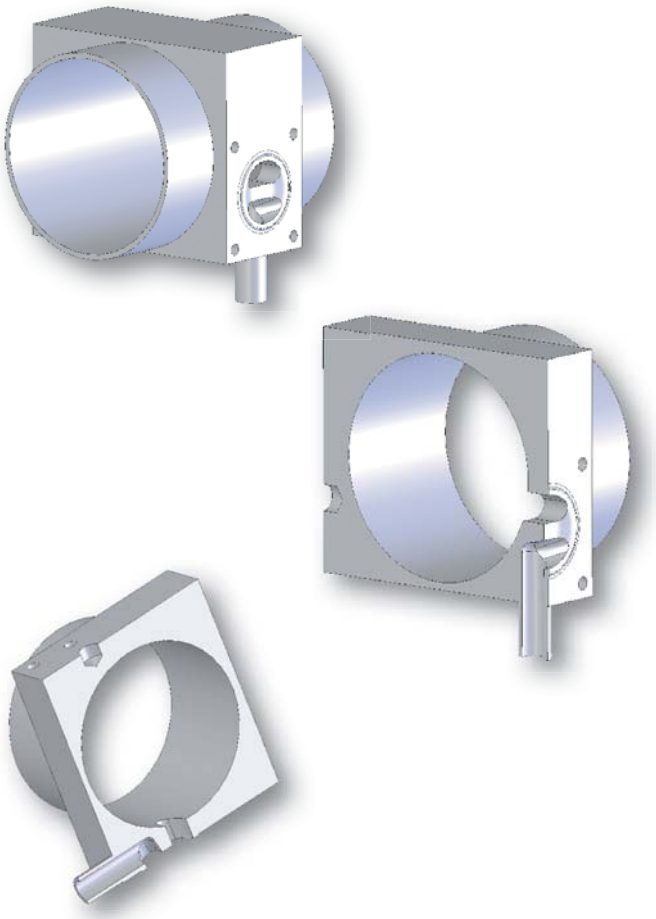

GEMÜ® Seal system CERTIFIED EHEDG EUROPEAN HYGIENIC ENGINEERING & DESIGN GROUP TYPE EL JUNE 2006

The original GEMÜ seal system

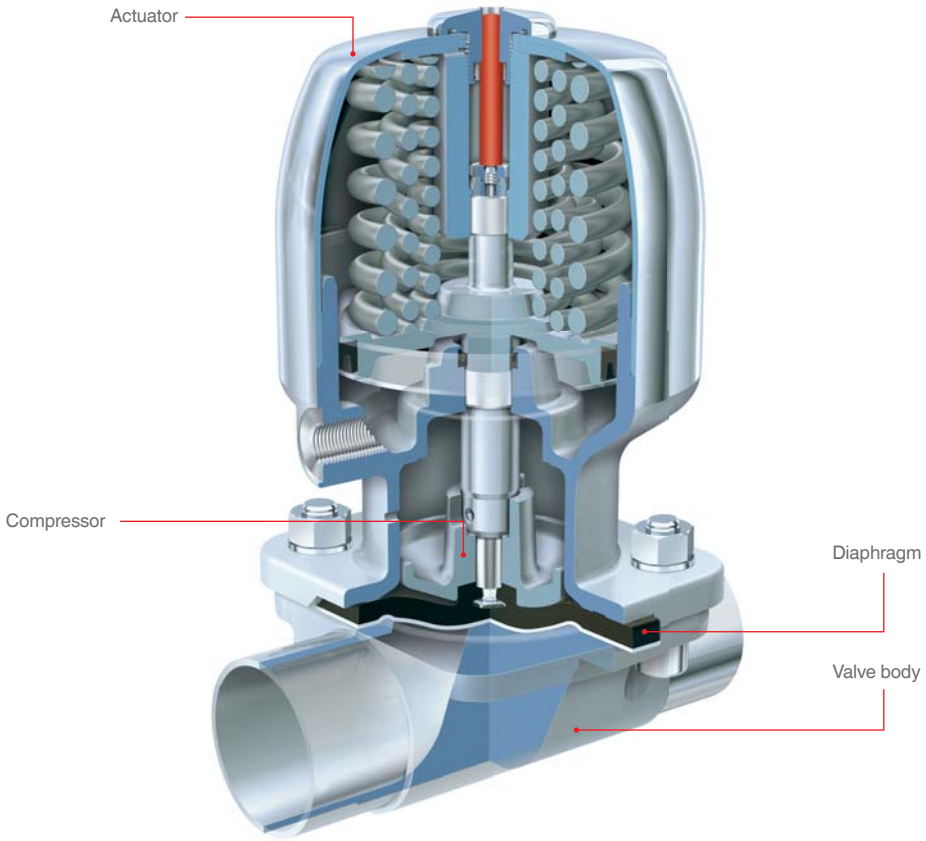

As a recognised diaphragm valve specialist, GEMÜ are familiar with almost all industrial sectors and applications. We are the leading supplier of stainless steel valves for aseptic and sterile applications in the pharmaceutical industry, biotechnology industry, as well as the foodstuff and beverage industries. As well as this, our valves also stand for reliability and a high standard of quality in the chemical and processing industries. The diaphragm, a central sealing element in the piping system is of major importance. Only the diaphragm and the valve body are in contact with the medium. At the same time, they also guarantee external hermetic sealing of the pipeline.

The system is more than the sum of the individual parts

The outstanding characteristics of the diaphragm valve are the result of the perfect interaction of tuned components. These are the valve body, the shut-off diaphragm, the diaphragm fixing, the compressor as well as the actuator. Our many years of experience and intensive dialogue with plant operators has enabled us to continue optimising the diaphragm valve design and its individual components.

Diaphragm and valve body are "inseparable"

GEMÜ valve bodies have a raised circular sealing bead on the inside diameter, in contrast to the valve bodies of other manufacturers. This results in a defined sealing edge. This measure reduces the ring-shaped gap between diaphragm and valve body in the external sealing area. This special feature makes GEMÜ diaphragm valves suitable for sterile applications. We also consider this crucial design and functional characteristic, which was developed by GEMÜ more than three decades ago and constantly refined, during the development of our diaphragms. Only this ensures that our customers can rely on the valve as a complete unit.
GEMÜ diaphragms have been developed, tested, and approved for applications with GEMÜ valve bodies. Therefore GEMÜ do not recommend or guarantee the use of other manufacturers diaphragms with GEMÜ valve bodies. We shall not accept any liability resulting from the use of diaphragms of other manufacturers inside GEMÜ diaphragm valves.

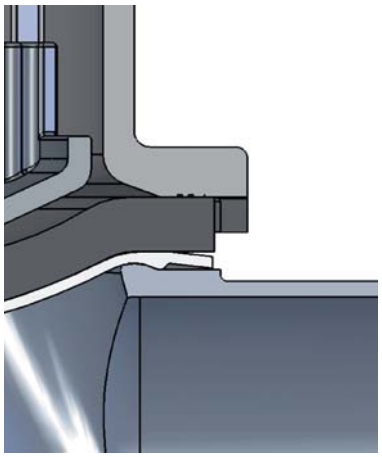

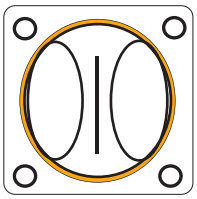

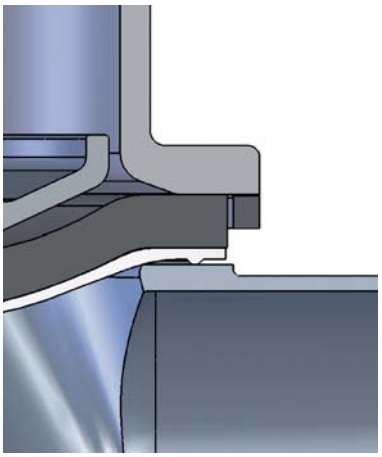

GEMÜ seal system

Conventional seal systems

GEMÜ® Seal system

CERTIFIED EHEDG EUROPEAN HYGIENIC ENGINEERING & DESIGN GROUP

TYPE EL
JUNE 2006

As a leading manufacturer world-wide we had the GEMÜ diaphragm seal system certified in 2002 and were granted the EHEDG certificate.

Flexible diaphragm fixing

The diaphragm is uniformly fixed in the compressor by means of a threaded pin. The only exception is the smallest diaphragm size (diaphragm size 8), which is pushed in with a rubber pin. The uniform fixing method applies both to soft elastomer and PTFE diaphragms. The largest advantage of fixing by means of a threaded pin, e.g. in comparison to a bayonet fitting, is the even transfer of forces onto the large area of the flanks of the screw thread. This prevents damage to the mechanical connection between compressor and diaphragm especially under vacuum operating conditions. The uniform fixing of elastomer and PTFE diaphragms enables subsequent replacement of the diaphragm while using the same actuator.

Diaphragm size 8

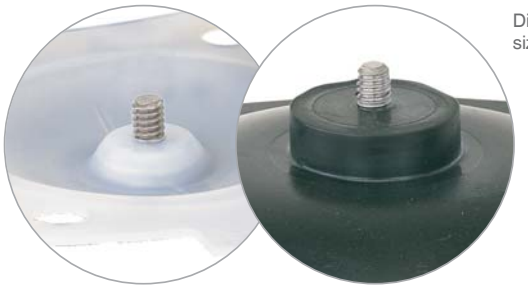

Diaphragm sizes 10 - 100

GEMÜ diaphragms
Soft elastomer and PTFE

Code 17, diaphragm size 25

Soft elastomer diaphragms

Soft elastomer diaphragms consist of EPDM rubber mixtures, which are peroxidically cross-linked (vulcanised) with each other. This enables the diaphragms to be used safely, even at high media temperatures. The diaphragms are provided with different technical features dependent on the mixture used and on the processing conditions such as the duration of the cross-linking process, the vulcanisation temperature as well as the vulcanisation pressure. The following statement applies in principle to soft elastomer materials: the higher the temperature load capability, the lower the service life is in relationship to the mechanical stress. Therefore both the temperature load and the deformability of diaphragms must be optimally adjusted to the application. Different constructional designs are available to achieve this. Soft elastomer diaphragms are characterised by a high insensitivity in the case of mechanically contaminated working media, e.g. cellular lumps, solid matter or catalytic solid matter. Slurries usually do not affect the function of the valve or the seal on the valve weir. Different EPDM rubber mixtures can be selected according to the operating/sterilisation temperatures and the chemical characteristics or the working media.

Code 5E, diaphragm size 25

PTFE diaphragms

The GEMÜ PTFE diaphragms are made of a chemically modified second-generation PTFE (TFM™*) and provide maximum chemical resistance. Even under steam conditions, PTFE diaphragms wear much more slowly than soft elastomer diaphragms. In the case of highly permeating media the structure of PTFE materials requires appropriately larger bonding thicknesses, stiffening this diaphragm version compared to pure soft elastomer diaphragms. Due to the higher rigidity the service life of the diaphragm may be reduced on high cycle duties depending on the application.

Diaphragm expertise
Manufacture and documentation

GEMÜ leaves nothing to chance in the development and manufacture of diaphragms. As well as many years of experience in the field of diaphragm valves, GEMÜ can draw on the group's ever increasing expertise in the field of diaphragm production. In addition to developing compounds, this also includes producing and permanent controlling the diaphragms during the manufacturing process. Random sampling of the finished products completes the comprehensive test cycle.

GEMÜ ensures its usual diaphragm quality thanks to the following measures:

- *Raw materials are sourced exclusively from selected suppliers*
- *Comprehensive testing of the raw materials in our in-house laboratory or in external, accredited institutions*
- *Storage of raw materials under controlled conditions*
- *Automated testing and documentation processes during production*
- *State-of-the-art production facilities*
- *The diaphragms are tested on our own test rigs (includes special test cycles for the pharmaceutical industry)*

Selection of diaphragms

Diaphragm	Material/Design	Diaphragm size	Temperature range [°C] Liquid media Min.	Max.	Sterilisation [1]	Code
EPDM	Ethylene-propylene-diene rubber	8 - 100	-10	100	max. 150 °C [2] max. 60 min. per cycle	13/3A
EPDM	Ethylene-propylene-diene rubber	8 - 100	-10	100	max. 150 °C [2] max. 180 min. per cycle	17
PTFE/EPDM	Fully laminated PTFE diaphragm with EPDM back	8, 10, 100	-10	100	max. 150 °C [2], no time limit per cycle	52/5A
PTFE/EPDM	Convex two-piece PTFE diaphragm with loose EPDM back	25, 40, 50, 80	-10	100	max. 150 °C [2], no time limit per cycle	5E

[1] The sterilisation temperature is valid for steam (saturated steam) or superheated water.
[2] If the sterilisation temperatures listed above are applied to the EPDM diaphragms for longer periods of time, the service life of the diaphragms will be reduced. In these cases, maintenance cycles must be adapted accordingly.
This also applies to PTFE diaphragms exposed to high temperature fluctuations.

PTFE diaphragms can also be used as moisture barriers; however, this will reduce their service life. The maintenance cycles must be adapted accordingly.

GEMÜ 555 and 505 globe valves are particularly suitable for use in the area of steam generation and distribution. The following valve arrangement for interfaces between steam pipes and process pipes has proven itself over time: A globe valve for shutting off steam pipes and a diaphragm valve as an interface to the process pipes.

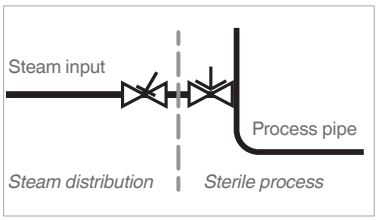

Each application must be analysed before the selection of the diaphragm material. Since the most varied operating conditions often prevail within a plant at different locations, it can be necessary to use different valves and materials. In particular, the chemical characteristics and the temperature of the working media often lead to different interactions. The suitability of the materials used must therefore always be examined individually with regard to the current resistance list or checked by an authorised specialist. Only this procedure guarantees that the application will operate safely and economically for a longer period.
Diaphragms are wearing parts. They need to be regularly inspected and replaced otherwise malfunctions can occur, possibly resulting in hazardous situations. Please note: The maintenance intervals for inspecting and replacing diaphragms are application-dependent. In order to determine a suitable maintenance interval, the maintenance history and the stresses placed on the parts due to frequent sterilisation or frequent cycle duties must be taken into account.

Note

Since plastics and elastomers are subject to natural aging, we recommend observing the GEMÜ storage conditions for shut-off diaphragms. You thereby guarantee maximum storage and service life of the diaphragms.
The temperatures specified above are merely the permissible temperature ranges for the respective diaphragm. The permissible temperature ranges of the valve must always be taken into account for the overall valve design. These can be found in the respective datasheets.
The temperature values are indicated irrespective of operating pressure and diaphragm size and apply to water and/or inert gases. When using water vapour or saturated steam, observe the steam pressure diagram.

Certificates and approvals					Compatibility with media	Special features
FDA compliant	USP Class VI	EHEDG	TA Luft (German Clean Air Act)	O_2 BAM		
●	●	●	●	●	Very good all-round elastomer, resistant to many acidic and alkaline media, demineralised and deionised hot water, inert and many other industrial gases.	Suitable for vacuum, low gas permeability, applicable for steam sterilisation.
●	●	●	●			Compound and construction of the diaphragm have been specially optimised for steam applications, clearly improved service life.
●	●	●	●	●	Resistant to nearly all chemicals, such as strong acids, alkalis and salts, also at high temperatures, steam, WFI as well as pharmaceuticals. Good resistance to solvents, chlorine, and aromatic hydrocarbons.	Fully laminated diaphragm, can be used in steam. Low gas permeability.
●	●	●	●	●		Convex two-piece diaphragm with loose PTFE face for higher switching cycles, can be used for permanent steam application. Special compounding and production by GEMÜ. Special seal contour for external sealing on the bottom of the diaphragm. Low gas permeability.

EPDM diaphragm dimensions [mm]

MG*	DN	NPS	A	B	C	D	ød	e	h	W	α	β	γ	Y	Number of bolt holes
8	4 - 15	¼" -½"	22	22	31,5	31,5	4,5	4	5,6	-	-	-	-	-	4
10	10 - 20	⅜" - ¾"	39	44	48	53	5,2	5	9	M4	-	-	-	-	4
25	15 - 25	½" - 1"	54	46	71,7	66,7	9	6	8	¼"	-	-	-	-	4
40	32 - 40	1¼" - 1½"	70	65	100	90	11,5	7	8	¼"	-	-	-	-	4
50	50	2"	82	78	124	106	13	7	7	¼"	-	-	-	-	4
80	80	3"	127	114	186	156	18	9	8	5⁄16"	-	-	-	-	4
100	100	4"	194	-	228	-	13	10	9	5⁄16"	28°	42°	40°	-	8

* Diaphragm size
The thread of the diaphragm pin "W" corresponds to Whitworth standard.

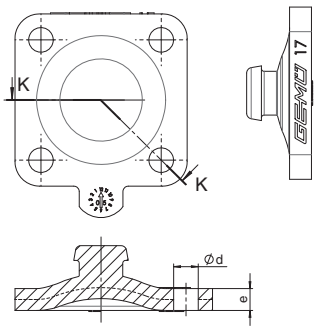

Diaphragm size 8

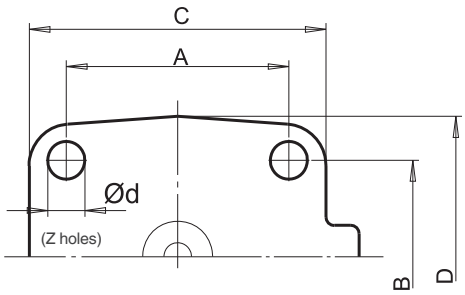

Diaphragm sizes 8 - 80

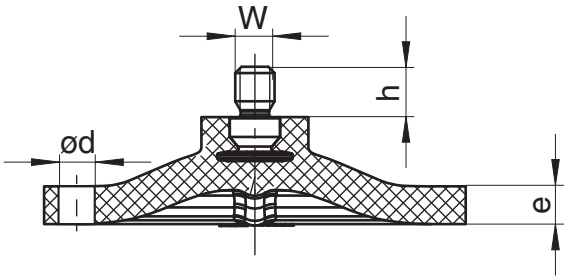

Diaphragm size 10 - 100

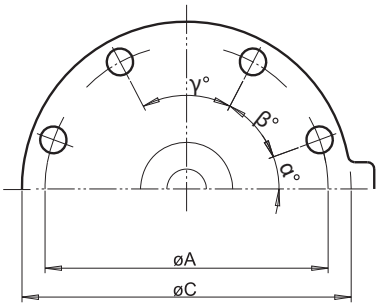

Diaphragm size 100

Certificates
and approvals

There is no universal diaphragm for all applications, hence we use different rubber mixtures and materials for our diaphragms. The different diaphragms have been certified according to their main fields of application so that we can certify conformity with the international regulations and rules below.

FDA (U.S. Food and Drug Administration)

FDA Extraction according to 21CFR 177.2600 for elastomers and 21CFR 177.1550 for PTFE.

USP (United States Pharmacopeia)

An independent institution has tested our diaphragms according to the regulations of the USP Class VI Chapter 87 In-Vitro and Chapter 88 In-Vivo. Furthermore, our diaphragms are free from animal ingredients.

EHEDG

Hygiene standards in the foodstuff and beverage industry are continuously increasing and are approaching those of the pharmaceutical industry in sensitive areas. For this reason, the EHEDG was established some years ago (European Hygienic Engineering and Design Group). GEMÜ was the first diaphragm valve manufacturer worldwide to be granted certification for its diaphragm valve system developed in 1999. The examination took place in 2002.

RoHS

GEMÜ diaphragms comply with the RoHS Directive 2011/65 EC and the WEEE Directive 2002/96 EC.

Pressure Equipment Directive

As all diaphragm valves are pressure bearing components and as the diaphragm is the central sealing element in addition to the valve body, all diaphragms also comply with the European Pressure Equipment Directive 97/23EC Art. 3 § 3. If no original GEMÜ shut-off diaphragms are installed, GEMÜ cannot accept any responsibility.

GOST certificate

GEMÜ diaphragm valves are certified to the Russian GOST and meet the hygienic requirements of the foodstuff industry in Russia.

Management systems

GEMÜ is certified according to quality standard DIN EN ISO 9001:2008. This does not only apply to the German sites in Ingelfingen-Criesbach, Niedernhall-Waldzimmern and Kupferzell but also to our plant in Switzerland and the diaphragm manufacturing site in France. All German plants are also certified to the international environmental standard DIN EN ISO 14001:2004.

All valves and diaphragms are intensively tested on our own test rigs under realistic conditions. They are subjected to several static and dynamic tests because the service life of diaphragms depends on numerous interactions. To this end, there is a wide range of testing devices available, such as a state-of-the-art steam and a CIP/SIP* test rig.

Statistical tests are generally used to test external leak tightness and leak tightness across the weir. These involve checking the leak tightness at the maximum operating pressure and determining the operating pressure at which the first leaks occur. Dynamic tests are continuous stress tests where the limit values are determined depending on the diaphragm material and diaphragm size. The operating pressure for diaphragm valves, which we permit and recommend, is considerably less than the pressure at which the valves start leaking. This means additional safety for your plant. Our shut-off diaphragms sometimes achieve several million switching cycles depending upon application, material, and diaphragm size.

Depending on diaphragm type and material, dynamic vacuum tests (70 mbar absolute) are additionally carried out at ambient pressure. After the diaphragms have passed these internal tests without problems, field tests are carried out at selected customers. The diaphragms are only released for final series production and worldwide marketing after these fields tests have been completed successfully.

All compounding for GEMÜ shut-off diaphragms are carried out exclusively for and according to the specifications of GEMÜ. Production is likewise carried out according to strict quality criteria within the GEMÜ Group or at selected partners with whom we have a close partnership spanning many years.

* CIP = Cleaning in Place, SIP = Sterilisation in Place

GEMÜ 601

Diaphragm valve, manually operated

Features

- *Suitable for inert, corrosive, liquid and gaseous media*
- *CIP/SIP capable*
- *Autoclavable*
- *Insensitive to particulate media*
- *Valve bodies and diaphragms available in various materials and designs*
- *Compact design for tight spaces*
- *Stepless minimum flow regulation due to seal adjuster*

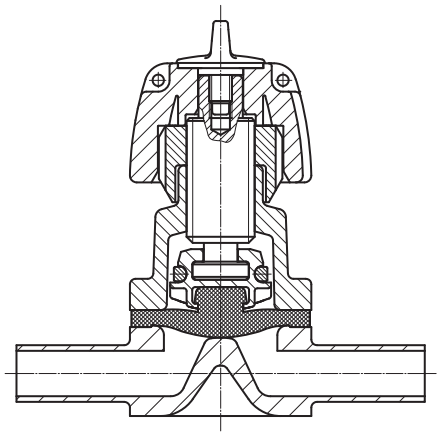

Operator	Plastic handwheel, with seal adjuster and optical position indicator
Nominal size	DN 4 to 15 (diaphragm size MG 8)
Body configuration	2/2-way body, T body, multi-port body, tank valve body
Connection	Butt weld spigots, threaded connections, clamp connections. Different standards and designs available
Control function	Manually operated
Valve body material	1.4435 Different standards and designs available
Media temperature *	-10 to 100 °C
Operating pressure **	0 to 10 bar
Diaphragm material	EPDM, PTFE/EPDM

* dependent on diaphragm material; ** depending von version and/or operating parameters

GEMÜ 602

Diaphragm valve, manually operated

Features

- *Suitable for inert, corrosive, liquid and gaseous media*
- *CIP/SIP capable*
- *Autoclavable*
- *Insensitive to particulate media*
- *Valve bodies and diaphragms available in various materials and designs*
- *Compact design for tight spaces*
- *Stepless minimum flow regulation due to seal adjuster*

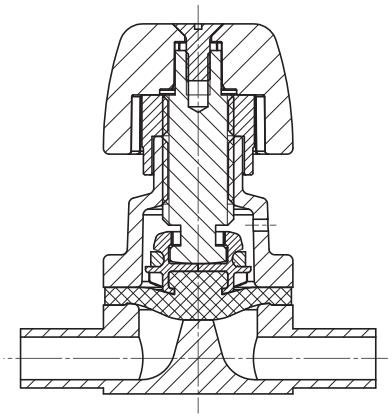

Operator	Stainless steel handwheel, with seal adjuster and optical position indicator
Nominal size	DN 4 to 15 (diaphragm size MG 8)
Body configuration	2/2-way body, T body, multi-port body, tank valve body
Connection	Butt weld spigots, threaded connections, clamp connections. Different standards and designs available
Control function	Manually operated
Valve body material	1.4435 Different standards and designs available
Media temperature *	-10 to 100 °C
Operating pressure **	0 to 10 bar
Diaphragm material	EPDM, PTFE/EPDM

* dependent on diaphragm material; ** depending von version and/or operating parameters

GEMÜ 612

Diaphragm valve, manually operated

Features

- *Suitable for inert, corrosive, liquid and gaseous media*
- *CIP/SIP capable*
- *Autoclavable*
- *Insensitive to particulate media*
- *Valve bodies and diaphragms available in various materials and designs*
- *Compact design for tight spaces*
- *Stepless minimum flow regulation due to seal adjuster*

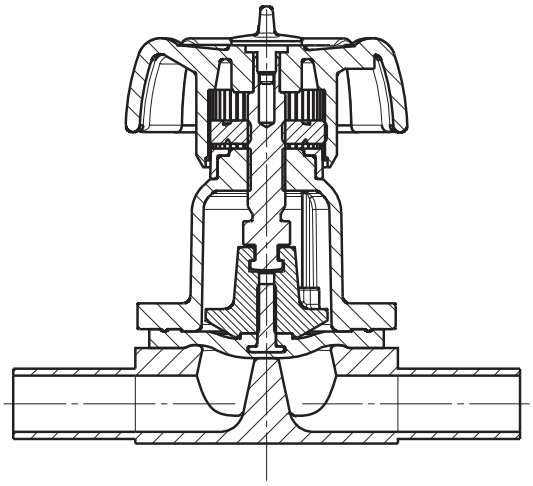

Operator	Plastic handwheel, with seal adjuster and optical position indicator
Nominal size	DN 10 to 20 (diaphragm size MG 10)
Body configuration	2/2-way body, T body, multi-port body, tank valve body
Connection	Butt weld spigots, threaded connections, clamp connections. Different standards and designs available
Control function	Manually operated
Valve body material	1.4435 Different standards and designs available
Media temperature *	-10 to 100 °C
Operating pressure **	0 to 10 bar
Diaphragm material	EPDM, PTFE/EPDM

* dependent on diaphragm material; ** depending von version and/or operating parameters

GEMÜ 673

Diaphragm valve, manually operated

Features

- *Suitable for inert, corrosive, liquid and gaseous media*
- *CIP/SIP capable*
- *Autoclavable*
- *Insensitive to particulate media*
- *Valve bodies and diaphragms available in various materials and designs*
- *Compact design for tight spaces*
- *Stepless minimum flow regulation due to seal adjuster*

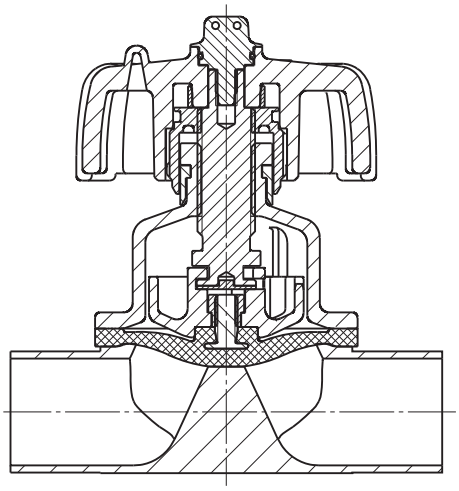

Operator	Plastic handwheel, with seal adjuster and optical position indicator
Nominal size	DN 15 to 50 (diaphragm size MG 25 to 50)
Body configuration	2/2-way body, T body, multi-port body, tank valve body
Connection	Butt weld spigots, threaded connections, clamp connections. Different standards and designs available
Control function	Manually operated
Valve body material	1.4435 Different standards and designs available
Media temperature *	-10 to 100 °C
Operating pressure **	0 to 10 bar
Diaphragm material	EPDM, PTFE/EPDM

* dependent on diaphragm material; ** depending von version and/or operating parameters

GEMÜ 673P9

Diaphragm valve, manually operated

Features

- *Suitable for inert, corrosive, liquid and gaseous media*
- *CIP/SIP/COP capable and autoclavable*
- *Suitable for particulate media*
- *Valve bodies and diaphragms available in various materials and designs*
- *Compact design for tight spaces*
- *Stepless minimum flow regulation due to seal adjuster*
- *External sealing by O-rings made of silicone*

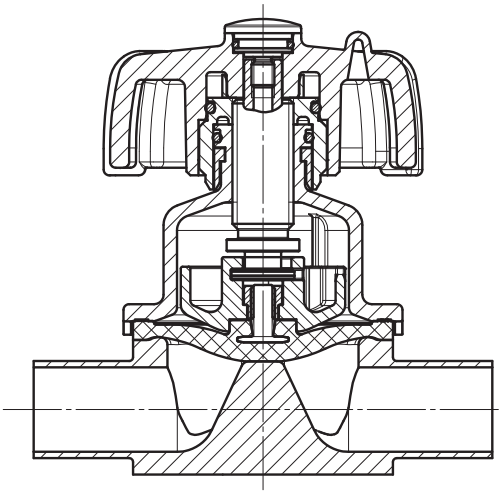

Operator	Plastic handwheel, with seal adjuster and optical position indicator
Nominal size	DN 4 to 50 (diaphragm size MG 8 to 50)
Body configuration	2/2-way body, T body, multi-port body, tank valve body
Connection	Butt weld spigots, threaded connections, clamp connections. Different standards and designs available
Control function	Manually operated
Valve body material	1.4435 Different standards and designs available
Media temperature *	-10 to 100 °C
Operating pressure **	0 to 10 bar
Diaphragm material	EPDM, PTFE/EPDM

* dependent on diaphragm material; ** depending von version and/or operating parameters

GEMÜ 653 BioStar®

Diaphragm valve, manually operated

T operator
shown with optional manual locking device

D operator

Features

- *Suitable for inert, corrosive, liquid and gaseous media*
- *CIP/SIP capable and autoclavable*
- *Insensitive to particulate media*
- *Surface finishes down to 0.25 µm, electropolished*
- *Designed according to GMP (Good Manufacturing Practice)*
- *Extensive range of accessories*
- *Option:*
  - Seal adjuster and stroke limiter
  - Handwheel locking device (electrical or mechanical)
  - Mounting facility for proximity switches

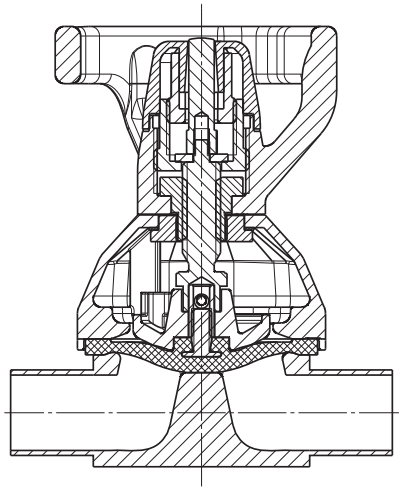

Operator	Plastic handwheel, with optical position indicator (from diaphragm size MG 10)
Nominal size	DN 10 to 100 (diaphragm size MG 10 to 100)
Body configuration	2/2-way body, T body, multi-port body, tank valve body
Connection	Butt weld spigots, threaded connections, clamp connections. Different standards and designs available
Control function	Manually operated
Valve body material	1.4435 Different standards and designs available
Media temperature *	-10 to 100 °C
Operating pressure **	0 to 10 bar
Diaphragm material	EPDM, PTFE/EPDM

* dependent on diaphragm material; ** depending von version and/or operating parameters

GEMÜ 654 BioStar®

Diaphragm valve, manually operated

T operator
shown with electrical locking device

D operator

Features

- *Suitable for inert, corrosive, liquid and gaseous media*
- *CIP/SIP capable and autoclavable*
- *Insensitive to particulate media*
- *Surface finishes down to 0.25 µm, electropolished*
- *Designed according to GMP (Good Manufacturing Practice)*
- *Extensive range of accessories*
- *Option:*
  - Seal adjuster and stroke limiter
  - Handwheel locking device (electrical or mechanical)
  - Mounting facility for proximity switches

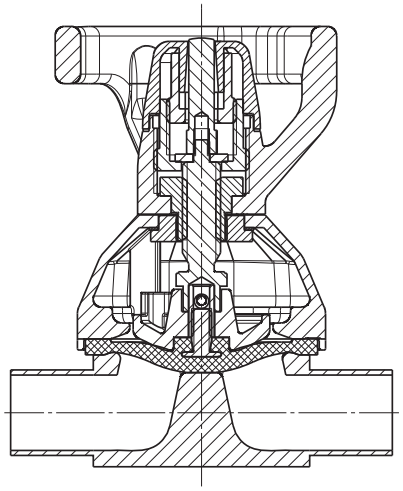

Operator	Stainless steel handwheel, with optical position indicator
Nominal size	DN 4 to 100 (diaphragm size MG 8 to 100)
Body configuration	2/2-way body, T body, multi-port body, tank valve body
Connection	Butt weld spigots, threaded connections, clamp connections. Different standards and designs available
Control function	Manually operated
Valve body material	1.4435 Different standards and designs available
Media temperature *	-10 to 100 °C
Operating pressure **	0 to 10 bar
Diaphragm material	EPDM, PTFE/EPDM

* dependent on diaphragm material; ** depending von version and/or operating parameters

GEMÜ 611

Diaphragm valve, manually operated

Features

- *Suitable for inert, corrosive, liquid and gaseous media*
- *Chemical resistance of operator*
- *Insensitive to particulate media*
- *Valve bodies and diaphragms available in various materials and designs*
- *Compact design for tight spaces*

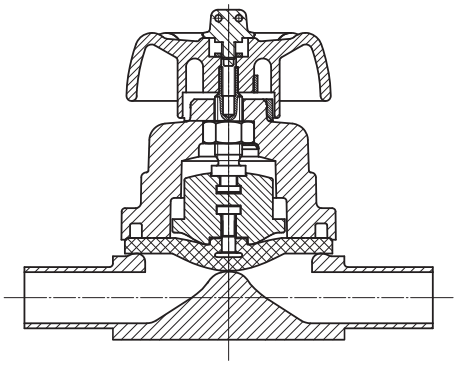

Operator	Plastic handwheel, with optical position indicator
Nominal size	DN 10 to 20 (diaphragm size MG 10)
Body configuration	2/2-way body
Connection	Butt weld spigots, threaded connections, clamp connections. Different standards and designs available
Control function	Manually operated
Valve body material	1.4435 Different standards and designs available
Media temperature *	-10 to 80 °C
Operating pressure **	0 to 10 bar
Diaphragm material	EPDM, PTFE/EPDM

* dependent on diaphragm material; ** depending von version and/or operating parameters

GEMÜ 671

Diaphragm valve, manually operated

Features

- *Suitable for inert, corrosive, liquid and gaseous media*
- *Chemical resistance of operator*
- *Insensitive to particulate media*
- *Valve bodies and diaphragms available in various materials and designs*
- *Compact design for tight spaces*
- *Option:*
  - Electrical remote indication of "open" handwheel position
  - Lockable handwheel clamp

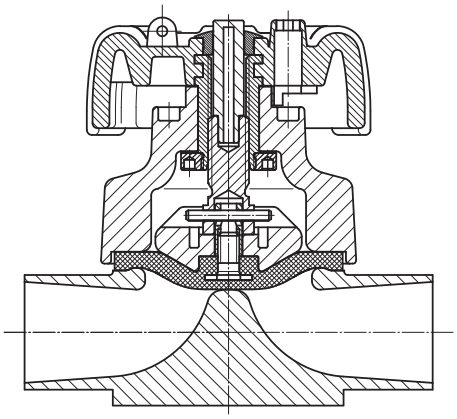

Operator	Plastic handwheel, with optical position indicator
Nominal size	DN 15 to 100 (diaphragm size MG 25 to 100)
Body configuration	2/2-way body
Connection	Butt weld spigots, threaded connections, clamp connections. Different standards and designs available
Control function	Manually operated, manually operated (lockable)
Valve body material	1.4435 Different standards and designs available
Media temperature *	-10 to 80 °C
Operating pressure **	0 to 10 bar
Diaphragm material	EPDM, PTFE/EPDM

* dependent on diaphragm material; ** depending von version and/or operating parameters

GEMÜ 643

Diaphragm valve, manually operated

Features

- *Suitable for inert, corrosive, liquid and gaseous media*
- *CIP/SIP capable*
- *Tanks can be optimally drained, cleaned and sterilized by using the GEMÜ 643*
- *Tank bottom valve with side mounted gear operator*
- *Compact design for tight spaces*
- *The temperature resistant plastic handwheel prevents burns injuries at high operating temperatures*
- *Operator rotatable through 360°*

Shaft extension (by user)

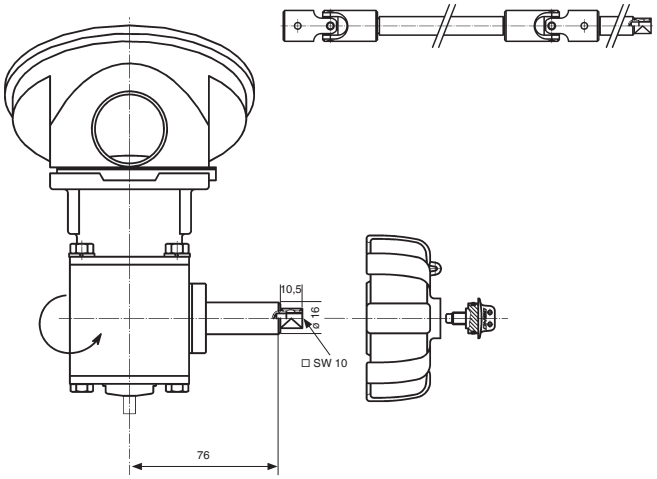

Operator	Angular gear with plastic handwheel
Nominal size	DN 15 to 40 (diaphragm size MG 25 to 40)
Body configuration	Tank valve body
Connection	Butt weld spigots, threaded connections, clamp connections. Different standards and designs available
Control function	Manually operated
Valve body material	1.4435 Different standards and designs available
Media temperature *	-10 to 100 °C
Operating pressure **	0 to 10 bar
Diaphragm material	EPDM, PTFE/EPDM

* dependent on diaphragm material; ** depending von version and/or operating parameters

GEMÜ 618

Diaphragm valve, motorized

Features

- *Suitable for inert, corrosive, liquid and gaseous media*
- *Chemical resistance of operator*
- *Insensitive to particulate media*
- *The motor will withstand being stalled under full voltage*
- *Valve bodies and diaphragms available in various materials and designs*
- *Suitable for use as a control valve (with integrated control module)*

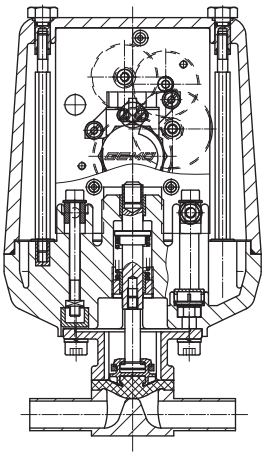

Operator	Plastic actuator with optical position indicator
Nominal size	DN 4 to 20 (diaphragm size MG 8 to 10)
Body configuration	2/2-way body, T body, multi-port body, tank valve body
Connection	Butt weld spigots, threaded connections, clamp connections. Different standards and designs available
Voltage	24 VAC, 120 VAC, 230 VAC, 50/60Hz
Valve body material	1.4435 Different standards and designs available
Media temperature *	-10 to 100 °C (without distance piece 15 to 50 °C)
Operating pressure **	0 to 6 bar
Diaphragm material	EPDM, PTFE/EPDM

* dependent on diaphragm material; ** depending von version and/or operating parameters

GEMÜ 698

Diaphragm valve, motorized

Features

- *Suitable for inert, corrosive, liquid and gaseous media*
- *Chemical resistance of operator*
- *CIP/SIP capable*
- *Insensitive to particulate media*
- *Valve bodies and diaphragms available in various materials and designs*
- *The valve stroke can be limited by adjustable limit switches*
- *Suitable for use as a control valve (with GEMÜ 1283)*

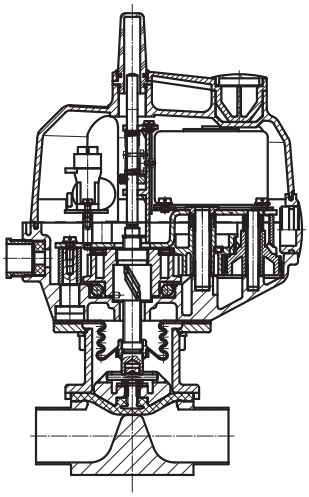

Operator	Plastic actuator with optical position indicator and manual override
Nominal size	DN 15 to 50 (diaphragm size MG 25 to 50)
Body configuration	2/2-way body, T body, multi-port body, tank valve body
Connection	Butt weld spigots, threaded connections, clamp connections. Different standards and designs available
Voltage	24 VAC, 120 VAC, 230 VAC, 50/60Hz
Valve body material	1.4435 Different standards and designs available
Media temperature *	-10 to 100 °C
Operating pressure **	0 to 10 bar
Diaphragm material	EPDM, PTFE/EPDM

* dependent on diaphragm material; ** depending von version and/or operating parameters

GEMÜ 605

Diaphragm valve, pneumatically operated

Features

- *Suitable for inert, corrosive, liquid and gaseous media*
- *Insensitive to particulate media*
- *Valve bodies and diaphragms available in various materials and designs*
- *Compact design for tight spaces*
- *CIP/SIP capable*
- *Versions according to ATEX on request*

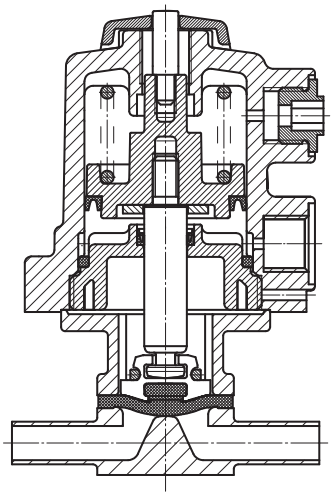

Operator	Plastic piston actuator, with optical position indicator
Nominal size	DN 4 to 15 (diaphragm size MG 8)
Body configuration	2/2-way body, T body, multi-port body, tank valve body
Connection	Butt weld spigots, threaded connections, clamp connections. Different standards and designs available
Control function	Normally closed (NC), Normally open (NO), Double acting (DA)
Valve body material	1.4435 Different standards and designs available
Media temperature *	-10 to 100 °C
Operating pressure **	0 to 8 bar
Diaphragm material	EPDM, PTFE/EPDM

* dependent on diaphragm material; ** depending von version and/or operating parameters

GEMÜ 615

Diaphragm valve, pneumatically operated

Features

- *Suitable for inert, corrosive, liquid and gaseous media*
- *Insensitive to particulate media*
- *Valve bodies and diaphragms available in various materials and designs*
- *Compact design for tight spaces*
- *Versions according to ATEX on request*

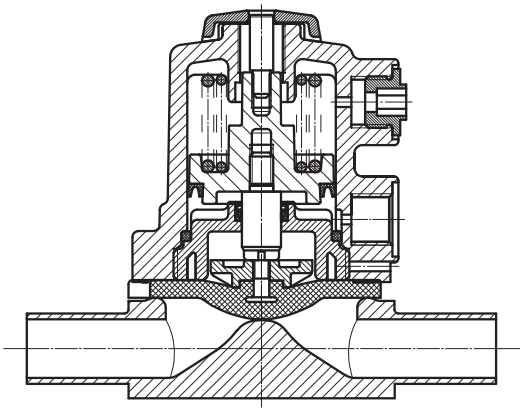

Operator	Plastic piston actuator, with optical position indicator
Nominal size	DN 10 to 20 (diaphragm size MG 10)
Body configuration	2/2-way body
Connection	Butt weld spigots, threaded connections, clamp connections. Different standards and designs available
Control function	Normally closed (NC), Normally open (NO), Double acting (DA)
Valve body material	1.4435 Different standards and designs available
Media temperature *	-10 to 80 °C
Operating pressure **	0 to 6 bar
Diaphragm material	EPDM, PTFE/EPDM

* dependent on diaphragm material; ** depending von version and/or operating parameters

GEMÜ 625

Diaphragm valve, pneumatically operated

Features

- *Suitable for inert, corrosive, liquid and gaseous media*
- *Insensitive to particulate media*
- *Valve bodies and diaphragms available in various materials and designs*
- *Compact design for tight spaces*
- *CIP/SIP capable*
- *Versions according to ATEX on request*

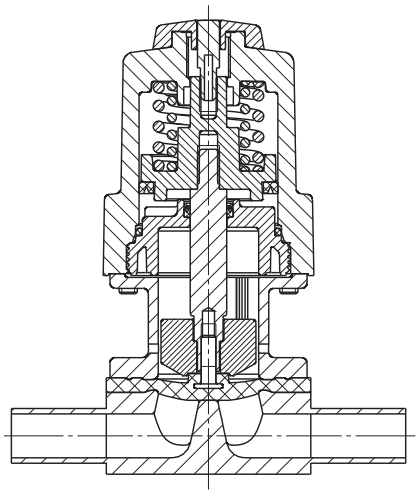

Operator	Plastic piston actuator, with optical position indicator
Nominal size	DN 10 to 20 (diaphragm size MG 10)
Body configuration	2/2-way body, T body, multi-port body, tank valve body
Connection	Butt weld spigots, threaded connections, clamp connections. Different standards and designs available
Control function	Normally closed (NC), Normally open (NO), Double acting (DA)
Valve body material	1.4435 Different standards and designs available
Media temperature *	-10 to 100 °C
Operating pressure **	0 to 6 bar
Diaphragm material	EPDM, PTFE/EPDM

* dependent on diaphragm material; ** depending von version and/or operating parameters

GEMÜ 687

Diaphragm valve, pneumatically operated

Features

- *Suitable for inert, corrosive, liquid and gaseous media*
- *Chemical resistance of operator*
- *CIP/SIP capable*
- *Insensitive to particulate media*
- *Valve bodies and diaphragms available in various materials and designs*
- *Various connections available*
- *Versions according to ATEX on request*

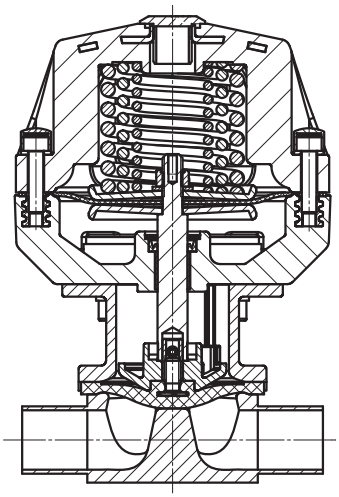

Operator	Plastic membrane actuator, with optical position indicator
Nominal size	DN 10 to 100 (diaphragm size MG 10 to 100)
Body configuration	2/2-way body, T body, multi-port body, tank valve body
Connection	Butt weld spigots, threaded connections, clamp connections. Different standards and designs available
Control function	Normally closed (NC), Normally open (NO), Double acting (DA)
Valve body material	1.4435 Different standards and designs available
Media temperature *	-10 to 100 °C
Operating pressure **	0 to 10 bar
Diaphragm material	EPDM, PTFE/EPDM

* dependent on diaphragm material; ** depending von version and/or operating parameters

GEMÜ 695

Diaphragm valve, pneumatically operated

Features

- *Suitable for inert, corrosive, liquid and gaseous media*
- *Insensitive to particulate media*
- *Valve bodies and diaphragms available in various materials and designs*
- *Versions according to ATEX on request*

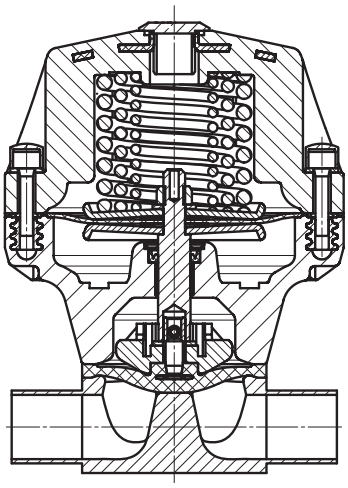

Operator	Plastic membrane actuator, with optical position indicator
Nominal size	DN 15 to 50 (diaphragm size MG 25 to 50)
Body configuration	2/2-way body
Connection	Butt weld spigots, threaded connections, clamp connections. Different standards and designs available
Control function	Normally closed (NC), Normally open (NO), Double acting (DA)
Valve body material	1.4435 Different standards and designs available
Media temperature *	-10 to 80 °C
Operating pressure **	0 to 10 bar
Diaphragm material	EPDM, PTFE/EPDM

* dependent on diaphragm material; ** depending von version and/or operating parameters

GEMÜ 650 BioStar®

Diaphragm valve, pneumatically operated

T operator

D operator

Features

- *Suitable for inert, corrosive, liquid and gaseous media*
- *Valve bodies and diaphragms available in various materials and designs*
- *Compact design for tight spaces*
- *Insensitive to particulate media*
- *CIP/SIP capable*
- *Autoclave-capable, depending on version*
- *Surface finishes down to 0.25 µm, electropolished*
- *Versions according to ATEX on request*

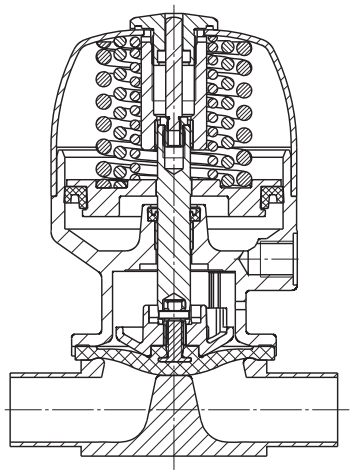

Operator	Stainless steel piston actuator, electropolished, with optical position indicator
Nominal size	DN 8 to 100 (diaphragm size MG 8 to 100)
Body configuration	2/2-way body, T body, multi-port body, tank valve body
Connection	Butt weld spigots, threaded connections, clamp connections. Different standards and designs available
Control function	Normally closed (NC), Normally open (NO), Double acting (DA)
Valve body material	1.4435 Different standards and designs available
Media temperature *	-10 to 100 °C
Operating pressure **	0 to 10 bar
Diaphragm material	EPDM, PTFE/EPDM

* dependent on diaphragm material; ** depending von version and/or operating parameters

GEMÜ 650TL

Diaphragm valve, manually operated

Features

- *Suitable for inert, corrosive, liquid and gaseous media*
- *Valve bodies and diaphragms available in various materials and designs*
- *Compact design for tight spaces*
- *Proximity switches can be fitted*
- *CIP/SIP capable*
- *Versions according to ATEX on request*
- *Standard optical position indicator*
- *Tapping valve with automatic closing function*

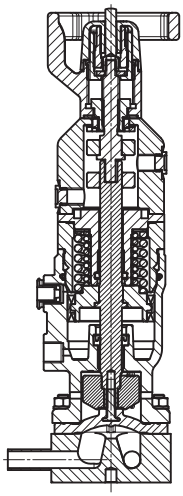

Operator	Stainless steel handwheel and piston actuator, electropolished, with optical position indicator
Nominal size	DN 4 to 25 (diaphragm size MG 8 to 25)
Body configuration	2/2-way body, T body, multi-port body, tank valve body
Connection	Butt weld spigots, threaded connections, clamp connections. Different standards and designs available
Control function	Manually operated, Normally closed (NC)
Valve body material	1.4435 Different standards and designs available
Media temperature *	-10 to 100 °C
Operating pressure **	0 to 8 bar
Diaphragm material	EPDM, PTFE/EPDM

* dependent on diaphragm material; ** depending von version and/or operating parameters

GEMÜ 651

Diaphragm valve, pneumatically operated

Features

- *Suitable for inert, corrosive, liquid and gaseous media*
- *Compact design for tight spaces*
- *CIP capable*
- *Integrated automation module as either combi switchbox or electro-pneumatic positioner*
- *Integrated travel and system control*
- *AS-Interface field bus connection (option for combi switchbox)*
- *Speed-AP* function for fast commissioning

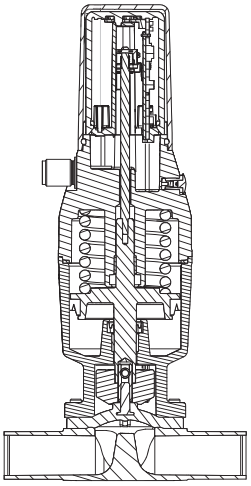

Operator	Stainless steel piston actuator, with fully integrated automation module, pilot valves and position feedback for e.g. AS-Interface
Nominal size	DN 4 to 25 (diaphragm size MG 8 to 25)
Body configuration	2/2-way body, T body, multi-port body, tank valve body
Connection	Butt weld spigots, threaded connections, clamp connections. Different standards and designs available
Control function	Normally closed (NC), Normally open (NO)
Valve body material	1.4435 Different standards and designs available
Media temperature *	-10 to 100 °C
Operating pressure **	0 to 10 bar
Diaphragm material	EPDM, PTFE/EPDM

* dependent on diaphragm material; ** depending von version and/or operating parameters

GEMÜ 658 / GEMÜ 688

Diaphragm valve, pneumatically operated

GEMÜ 658 GEMÜ 688

Features

- *Suitable for inert, corrosive, liquid and gaseous media*
- *CIP/SIP capable*
- *An adjusting screw in the actuator enables the setting of the opening and closing function and also the setting of a part stroke (for reduced flow)*
- *Both fast on/off operation and the possibility for precision dosing of the working medium*
- *Two-stage actuator*
- *Valve bodies and diaphragms available in various materials and designs*
- *Compact design*
- *Versions according to ATEX on request*

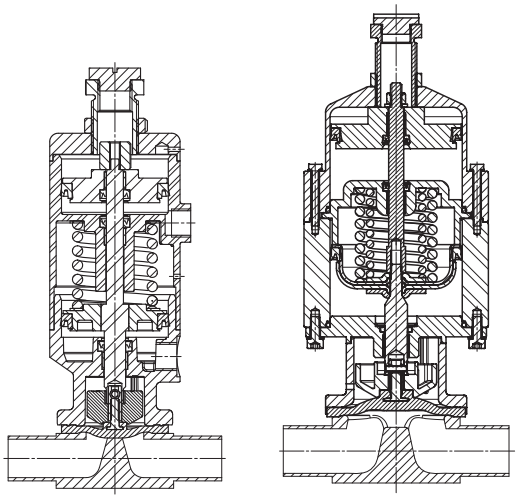

GEMÜ 658 GEMÜ 688

Operator	Stainless steel two-stage actuator
Nominal size	GEMÜ 658: DN 10 to 20 (diaphragm size MG 10) GEMÜ 688: DN 15 to 50 (diaphragm size MG 25 to 50)
Body configuration	2/2-way body, T body, multi-port body, tank valve body
Connection	Butt weld spigots, threaded connections, clamp connections. Different standards and designs available
Control function	Normally closed (NC)
Valve body material	1.4435 Different standards and designs available
Media temperature *	-10 to 100 °C
Operating pressure **	0 to 10 bar
Diaphragm material	EPDM, PTFE/EPDM

* dependent on diaphragm material; ** depending von version and/or operating parameters

GEMÜ 660

Diaphragm valve, pneumatically operated

Operator size 2
Control function 2 (NO)

Operator size 1
Control function 1 (NC)

Features

- *Suitable for inert, corrosive, liquid and gaseous media*
- *Valve bodies and diaphragms available in various materials and designs*
- *Compact design for tight spaces*
- *Various connections available*
- *CIP/SIP capable*
- *Versions according to ATEX on request*
- *Specially optimized for dosing and filling applications*

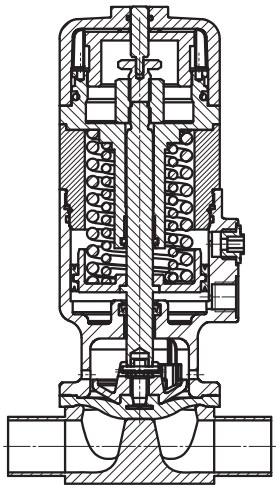

Operator	Stainless steel piston actuator, electropolished, with optical position indicator and integrated stroke limiter/seal adjuster
Nominal size	DN 4 to 25 (diaphragm size MG 8 to 25)
Body configuration	2/2-way body, T body, multi-port body, tank valve body
Connection	Butt weld spigots, threaded connections, clamp connections. Different standards and designs available
Control function	Normally closed (NC), Normally open (NO), Double acting (DA)
Valve body material	1.4435 Different standards and designs available
Media temperature *	-10 to 100 °C
Operating pressure **	0 to 5 bar
Diaphragm material	EPDM, PTFE/EPDM

* dependent on diaphragm material; ** depending von version and/or operating parameters

GEMÜ SUMONDO®

Controllable single-use diaphragm valve

Single-use technology is becoming increasingly important, as it helps avoid cross-contamination risks and simplifies plant design. Secondary processes once required for cleaning and sterilizing (CIP/SIP) are virtually no longer necessary at all in single-use systems and processes. The necessary purity is guaranteed through the sterilisation by gamma rays of all the process components used.

The key difference in comparison to the conventional stainless steel plant design primarily lies in the lower initial investment costs and faster availability of the components for single-use systems. These advantages really come to the fore when working with small batch sizes, such as those typically required when developing new active substances in pilot systems. Although systems can be automated to some extent with the valve designs used to date in the single-use sector, their control accuracy is very limited. In addition, the process for documenting and validating the processes is rather complex. With GEMÜ SUMONDO®, the customer is now able to manufacture their products in an even simpler and safer manner. This makes pharmaceutical processes in the development of active substances reproducible, documentable and, as a result of the higher level of automation, less susceptible to faults.

Due to an innovative new diaphragm bonding technology, it is now possible to use an actuator unit and thus a control module that have been tried and tested in the field of conventional plant engineering for single-use processes. As is also the case with internal welded diaphragms, the valve body comes with extensive approvals, such as those required in the pharmaceutical and medical industries.

Currently, three valve body versions are offered in the nominal sizes from ¼" to 1" with a hose barb or with a clamp connection. These are implemented in the form of through flow, T and angle valve bodies.

The GEMÜ single-use diaphragm valve SUMONDO® comprises a pneumatic actuator and a distance piece with a mounting plate made of stainless steel, as well as a valve body made of plastic. It is equipped with an internally welded diaphragm, it is gamma-sterilizable and is manufactured in the cleanroom under controlled conditions. During assembly, a pin located on the diaphragm of the single-use diaphragm valve body is introduced into the compressor of the pneumatic actuator and locked in place using an indexing plunger. After use, the valve body and its diaphragm can be removed from the actuator and disposed of. The actuator and mounting plate can be used multiple times and remain in the plant.

Positioners and process controllers
Overview

GEMÜ pneumatic actuators can usually be paired with our electro-pneumatic positioners and process controllers.
In addition to the process parameters and the control system for which a positioner must be suitable, other technical functions and properties also play an important part in the selection of the right positioner.

To make your choice easier, we have placed the four GEMÜ positioners in a comparison based on important features.

Function / Features		GEMÜ 1434 µPos®	GEMÜ 1435 ePos®	GEMÜ 1436 cPos®	GEMÜ 1436 cPos® eco
Controller type	Positioner	●	●	●	●
	Process controller			●	
Operation	Local display / keypad		●	●	
	Status display	●	●	●	●
	Web browser user			●	
	Fieldbus option (Profibus DP, Device Net)			●	
Housing	Plastic	●		●	●
	Aluminium		●		
Functions	Automatic initialisation (Speed^{AP})	●	●	●	●
	Alarm / error outputs		●	●	
	Min/max positions adjustable		●	●	
Mounting	Direct mounting to linear actuators	●	●	●	●
	Remote mounting to linear actuators	●	●	●	●
	Direct mounting to quarter turn actuators		●	●	●
	Remote mounting to quarter turn actuators	●	●	●	●
Control function of valve actuator	Control function 1, normally closed (NC)	●	●	●	●
	Control function 2, normally open (NO)	●	●	●	●
	Control function 3, double acting (DA)		●	●	

Combi switchboxes and electrical position indicators
for pneumatically operated linear valves

Our devices detect the valve stroke in any installation position without play and are tension-free. The sensor base of the GEMÜ 1234,1235, 4222 and 4242 series is positively connected to the valve spindle by means of a preloaded spring so that possible tangential forces of the valve actuator do not negatively affect the position indicator. The position indicators can be quickly and easily assembled and are safe and uncomplicated to handle.

They can be adapted to pneumatic actuators of GEMÜ globe and diaphragm valves. Due to its special design, the GEMÜ 9415 quarter turn actuator may likewise be combined with this type of position indicator.

	Combi switchboxes					Electrical position indicators									
Device type	**4242 [1]**	**4212 [1]**	**4222 (end-of-series article)**	**4226**	**4216**	**1234**	**1235/ 1236**	**1242**	**1201**	**1211**	**1231**	**1214**	**1215**	**1230**	**1232**
Valve stroke (in mm)	2 - 30	5 - 75	3 - 30 6 - 50 9 - 75	up to 30	up to 50	1 - 10	2 - 30 4 - 50 5 - 75	2 - 46	2 - 70	2 - 70	2 - 20	2 - 70		2 - 20	2 - 20
Electrical connection	M12			Cable gland		M12			Cable gland			Cable gland, M12 (optional)			
Programmable	●	●	●			●	●	●							
With integrated pilot valve	●	●	●	●	●										
Ex design	*	*		●	●			*		●	●		●[2]		
Fieldbus interface	●	●	●			●		●							
Mechanically adjustable (proximity switches)				●	●					●	●	●			●
Mechanically adjustable (microswitches)									●					●	
IO-Link interface	●	●					●	●							
Optical position indicator (LEDs)	●	●	●			●	●	●				●		●	●
Optical position indicator (mechanical)		●											●		
Feedback (OPEN and CLOSED)	●	●	●	●	●	●	●	●	●	●	●	●		●	●
Feedback (OPEN)													●		

[1] alternative product for end-of-series article GEMÜ 4222
[2] not with optional M12 plug
* under development (expected end of 2016)

Grades of surface finish
2/2-way valve bodies

Valve body surface finish, internal contour			
	Forged body - Codes 40, 42 Block material - Codes 41, 43	Investment casting Codes 32, 34	Code
Ra ≤ 0.8 µm, mechanically polished internal, blasted external	X	X	1502
Ra ≤ 0.8 µm, electropolished internal/external	X	-	1503
Ra ≤ 0.6 µm, mechanically polished internal, blasted external	X [1]	X [1]	1507
Ra ≤ 0.6 µm, electropolished internal/external	X [1]	-	1508
Ra ≤ 0.4 µm, mechanically polished internal, blasted external	X [1]	-	1536
Ra ≤ 0.4 µm, electropolished internal/external	X [1]	-	1537
Ra ≤ 0.25 µm, mechanically polished internal, blasted external	X [1]	-	1527
Ra ≤ 0.25 µm, electropolished internal/external	X [1]	-	1516

Ra acc. to DIN 4768; at defined reference points. Surface finish data refers to media wetted surfaces.
[1] Not possible for connections DN 8 code 55 and 59, DN 4 code 0 and all other connections Ø < 6 mm.

Modern, ergonomically shaped workstations and trained polishing staff give us the ability to provide high quality surface finishes. Depending on the required application, surface finishes from Ra 0.8 µm down to 0.25 µm can be achieved by polishing, electro polishing or a special process, we call “elysieren“.

Mechanical hand polishing is carried out at our works to ensure our high quality standard.

	GEMÜ Germany	GEMÜ US	DIN 11866		ASME BPE (2014)		
Code	Ra µm	Ra_{max} µinch	Hygienic class	Ra µm	Designation	Ra_{max} µinch	Ra µm - onverted
1502	≤ 0.8	30	H3	≤ 0.8	SF3	30	0.76
1503	≤ 0.8	30	HE3c	≤ 0.8	-	-	-
1508	≤ 0.6	25	-	-	SF6	25	0.64
1507	≤ 0.6	25	-	-	SF2	25	0.64
1537	≤ 0.4	20	HE4c	≤ 0.4	SF5	20	0.51
1536	≤ 0.4	20	H4	≤ 0.4	SF1	20	0.51
1527	≤ 0.25	15	H5	≤ 0.25	-	-	-
1516	≤ 0.25	15	HE5c	≤ 0.25	SF4	15	0.38

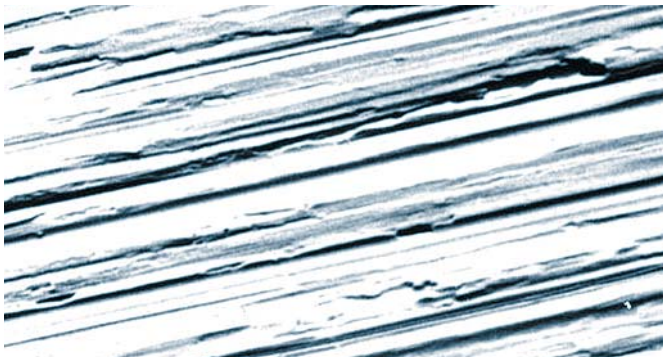

Material 1.4435 polished with 400 grit.
Magnification = 650fold.

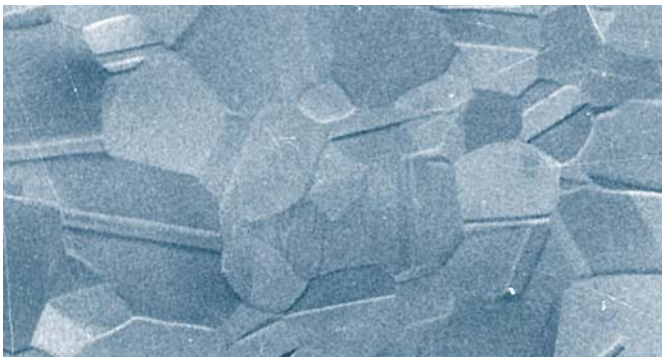

Material 1.4435 polished with 400 grit and electropolished.
Magnification = 650fold.

Butt weld spigot bodies

In addition to the ISO butt weld spigots, the ASME BPE butt weld spigots are also standard connections in the GEMÜ aseptic valve range. Furthermore, other common standard butt weld spigots, such as DIN series 0, DIN 11850 series 1 to 3, BS-OD tubing, JIS and SMS 3008, are also available as standard.

The lengths of our butt weld spigot bodies are designed to provide the optimum for automatic orbital welding.

The butt weld spigot lengths guarantee trouble-free mounting and welding in an orbital welding machine using the collets and welding heads commonly used in the Biopharm industry. We recommend using this welding process to achieve the best possible weld quality and the process should be carried out by suitably qualified and certified welders.

Butt weld spigots	Code
Butt weld spigots DIN	0
Butt weld spigots DIN 11850, series 1	16
Butt weld spigots DIN 11850, series 2	17
Butt weld spigots DIN 11850, series 3	18
Butt weld spigots DIN 11866, series A	1A
Butt weld spigots DIN 11866, series B	1B
Butt weld spigots JIS-G 3459 5s	32
Butt weld spigots JIS-G 3447	35
Butt weld spigots JIS-G 3459 10s	36
Butt weld spigots SMS 3008	37
Butt weld spigots BS 4825 Part 1	55
Butt weld spigots ASME BPE	59
Butt weld spigots EN ISO 1127	60
Butt weld spigots ANSI/ASME B36.19M, Schedule 10s	63
Butt weld spigots ANSI/ASME B36.19M, Schedule 40s	65

The difference between tube specifications (Example DN 15)

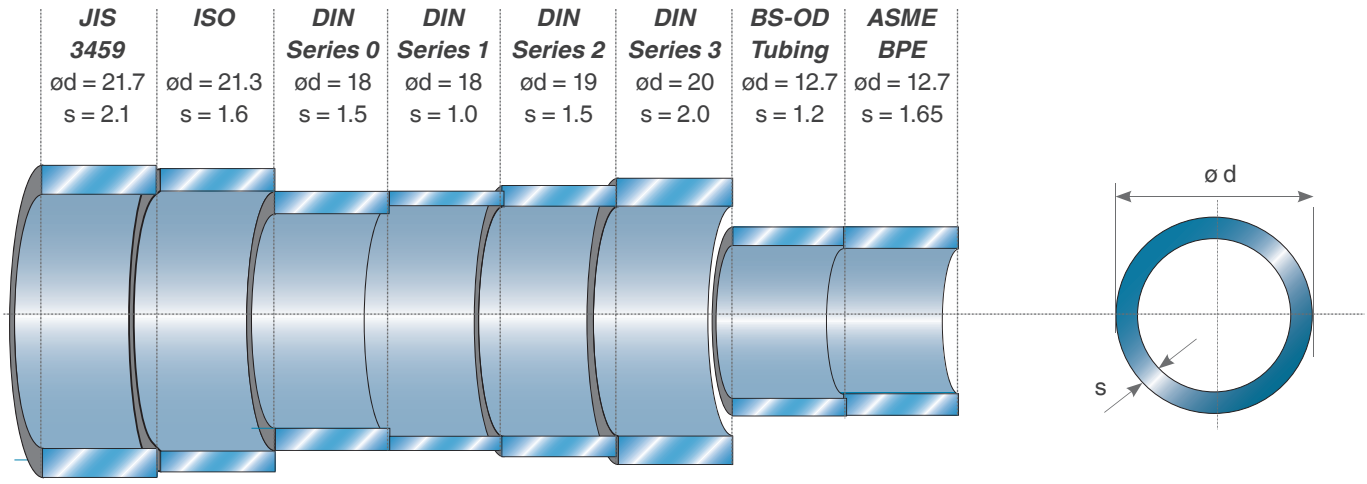

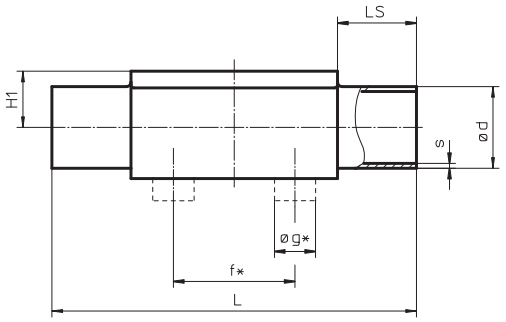

* only for investment cast body
Optimum draining angle see brochure “2/2-Way and T Valve Bodies in Stainless Steel”

Dimensions in mm

									DIN		DIN 11850						DIN 11866				EN ISO 1127	
									Series 0 / Code 0		Series 1 / Code 16		Series 2 / Code 17		Series 3 / Code 18		Series A Code 1A		Series B / Code 1B		Code 60	
MG	DN	NPS	f*	øg*	L	LS	H1*	H1**	ød	s	ød	s	ød	s	ød	s	ød	s	ød	s	ød	s
8	4	-	-	-	72	20	8.5		6	1.0	-	-	-	-	-	-	-	-	-	-	-	-
	6	-	-	-	72	20	8.5		8	1.0	-	-	-	-	-	-	8	1.0	10.2	1.6	10.2	1.6
	8	¼"	-	-	72	20	8.5		10	1.0	-	-	-	-	-	-	10	1.0	13.5	1.6	13.5	1.6
	10	⅜"	-	-	72	20	8.5		-	-	12	1.0	13	1.5	14	2.0	13	1.5	-	-	-	-
	15	½"	-	-	72	20	8.5		-	-	-	-	-	-	-	-	-	-	-	-	-	-
10	10	⅜"	30	13.5	108	25	12.5		-	-	12	1.0	13	1.5	14	2.0	13	1.5	17.2	1.6	17.2	1.6
	15	½"	30	13.5	108	25	12.5		18	1.5	18	1.0	19	1.5	20	2.0	19	1.5	21.3	1.6	21.3	1.6
	20	¾"	30	13.5	108	25	12.5		-	-	-	-	-	-	-	-	-	-	-	-	-	-
25	15	½"	40	13.5	120	25	13.0	19.0	18	1.5	18	1.0	19	1.5	20	2.0	19	1.5	21.3	1.6	21.3	1.6
	20	¾"	40	13.5	120	25	16.0	19.0	22	1.5	22	1.0	23	1.5	24	2.0	23	1.5	26.9	1.6	26.9	1.6
	25	1"	40	13.5	120	25	19.0		28	1.5	28	1.0	29	1.5	30	2.0	29	1.5	33.7	2.0	33.7	2.0
40	32	1 ¼"	68	13.5	153	25	24.0	26.0	34	1.5	34	1.0	35	1.5	36	2.0	35	1.5	42.4	2.0	42.4	2.0
	40	1 ½"	75	13.5	153	25	26.0		40	1.5	40	1.0	41	1.5	42	2.0	41	1.5	48.3	2.0	48.3	2.0
50	50	2"	90	13.5	173	30	32.0		52	1.5	52	1.0	53	1.5	54	2.0	53	1.5	60.3	2.0	60.3	2.0
80	65	2 ½"	-	-	216	30	-	62.0	-	-	-	-	70	2.0	-	-	70	2.0	76.1	2.0	76.1	2.0
	80	3"	-	-	254	30	-	62.0	-	-	-	-	85	2.0	-	-	85	2.0	88.9	2.3	88.9	2.3
100	100	4"	-	-	305	30	-	76.0	-	-	-	-	104	2.0	-	-	104	2.0	114.3	2.3	114.3	2.3

MG = diaphragm size * only for investment cast design ** only for forged design

Dimensions in mm

									JIS-G 3447 Code 35		JIS-G 3459 Code 36		SMS 3008 Code 37		BS 4825 Code 55		ASME BPE Code 59		ANSI/ASME B36.19M 10s Code 63		ANSI/ASME B36.19M 40s Code 65	
MG	DN	NPS	f*	øg*	L	LS	H1*	H1**	ød	s	ød	s	ød	s	ød	s	ød	s	ød	s	ød	s
8	4	-	-	-	72	20	8.5		-	-	-	-	-	-	-	-	-	-	-	-	-	-
	6	-	-	-	72	20	8.5		-	-	10.5	1.20	-	-	-	-	-	-	10.3	1.24	10.3	1.73
	8	¼"	-	-	72	20	8.5		-	-	13.8	1.65	-	-	6.35	1.2	6.35	0.89	13.7	1.65	13.7	2.24
	10	⅜"	-	-	72	20	8.5		-	-	-	-	-	-	9.53	1.2	9.53	0.89	-	-	-	-
	15	½"	-	-	72	20	8.5		-	-	-	-	-	-	12.70	1.2	12.70	1.65	-	-	-	-
10	10	⅜"	30	13.5	108	25	12.5		-	-	17.3	1.65	-	-	9.53	1.2	9.53	0.89	17.1	1.65	17.1	2.31
	15	½"	30	13.5	108	25	12.5		-	-	21.7	2.10	-	-	12.70	1.2	12.70	1.65	21.3	2.11	21.3	2.77
	20	¾"	30	13.5	108	25	12.5		-	-	-	-	-	-	19.05	1.2	19.05	1.65	-	-	-	-
25	15	½"	40	13.5	120	25	13.0	19.0	-	-	21.7	2.10	-	-	-	-	-	-	21.3	2.11	21.3	2.77
	20	¾"	40	13.5	120	25	16.0	19.0	-	-	27.2	2.10	-	-	19.05	1.2	19.05	1.65	26.7	2.11	26.7	2.87
	25	1"	40	13.5	120	25	19.0		25.4	1.2	34.0	2.80	25.0	1.2	-	-	25.40	1.65	33.4	2.77	33.4	3.38
40	32	1 ¼"	68	13.5	153	25	24.0	26.0	31.8	1.2	42.7	2.80	33.7	1.2	-	-	-	-	42.2	2.77	42.2	3.56
	40	1 ½"	75	13.5	153	25	26.0		38.1	1.2	48.6	2.80	38.0	1.2	-	-	38.10	1.65	48.3	2.77	48.3	3.68
50	50	2"	90	13.5	173	30	32.0		50.8	1.5	60.5	2.80	51.0	1.2	-	-	50.80	1.65	60.3	2.77	60.3	3.91
80	65	2 ½"	-	-	216	30	-	62.0	63.5	2.0	76.3	3.00	63.5	1.6	-	-	63.50	1.65	73.0	3.05	73.0	5.16
	80	3"	-	-	254	30	-	62.0	76.3	2.0	89.1	3.00	76.1	1.6	-	-	76.20	1.65	88.9	3.05	88.9	5.49
100	100	4"	-	-	305	30	-	76.0	101.6	2.0	114.3	3.00	101.6	2.0	-	-	101.60	2.11	114.3	3.05	114.3	6.02

MG = diaphragm size * only for investment cast design ** only for forged design

Clamp bodies

All clamp connections are machined according to the spigot dimensions e.g. to DIN 11850, SMS 3008 or ASME BPE. We ask our customers to state which version or standard the connections shall comply with.
Depending on the version, clamps are machined from the solid forged body or welded on. Investment cast bodies have welded on clamps as standard.
Welding is carried out by specially qualified and certified welders utilising state-of-the art welding technology. In principle, special connections requested by customers can be provided on GEMÜ butt weld spigot bodies. Thus it is also possible to have different connections on one body.

Clamp connections for forged 2/2-way bodies	Code
Clamps ASME BPE for pipe ASME BPE, short design	80
Clamps following ASME BPE for pipe EN ISO 1127, length EN 558-1, series 7	82
Clamps ASME BPE for pipe ASME BPE, length EN 558-1, series 7	88
Clamps DIN 32676 for pipe DIN 11850 length EN 558-1, series 7	8A
Clamps SMS 3017 for pipe SMS 3008 length EN 558-1, series 7	8E
Clamps IDF/ISO for pipe JIS-G 3447 length EN 558-1, series 7	8F
Clamps IDF/ISO for pipe JIS-G 3459 length EN 558-1, series 7	8H

Other versions on request

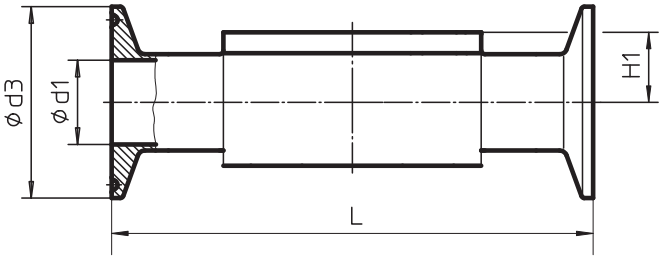

Optimum draining angle see brochure "2/2-Way and T Valve Bodies in Stainless Steel"

Pipe				Code 59 ASME-BPE			Code 60 EN ISO 1127			Code 59 ASME-BPE			Code 16,17,18 DIN 11850			Code 37 SMS3008			Code 35 JIS-G3447			Code 36 JIS-G3459		
Clamp connection				Code 80			Code 82			Code 88			Code 8A			Code 8E			Code 8F			Code 8H		
DN	NPS	MG	H1	ød1	ød3	L	ød1	ød3	L	ød1	ød3	L	ød1	ød3	L	ød1	ød3	L	ød1	ød3	L	ød1	ød3	L
8	¼"	8	8	4.57	25	63.5	10.30	25.0	63.5	-	-	-	-	-	-	-	-	-	-	-	-	10.5	34	88.9
10	⅜"		8	7.75	25	63.5	-	-	-	-	-	-	10.00	34	88.9	-	-	-	-	-	-	-	-	-
15	½"		8	9.40	25	63.5	-	-	-	9.40	25	108	-	-	-	-	-	-	-	-	-	-	-	-
10	⅜"	10	12.5	-	-	-	14.00	25.4	108	-	-	-	10.00	34	108	-	-	-	-	-	-	14.00	34	108
15	½"		12.5	9.40	25	88.9	18.10	50.5	108	9.40	25	108	16.00	34	108	-	-	-	-	-	-	17.50	34	108
20	¾"		12.5	15.75	25	101.6	-	-	-	15.75	25	117	-	-	-	-	-	-	-	-	-	-	-	-
15	½"	25	19	9.40	25	101.6	18.10	50.5	108	9.40	25	108	16.00	34	108	-	-	-	-	-	-	17.50	34	108
20	¾"		19	15.75	25	101.6	23.70	50.5	117	15.75	25	117	20.00	34	117	-	-	-	-	-	-	-	-	-
25	1"		19	22.10	50.5	114.3	29.70	50.5	127	22.10	50.5	127	26.00	50.5	127	22.60	50.5	127	23.00	50.5	127	-	-	-
32	1 ¼"	40	26	-	-	-	38.40	64	146	-	-	-	32.00	50.5	146	31.30	50.5	146	29.40	50.5	146	-	-	-
40	1 ½"		26	34.80	50.5	139.7	44.30	64	159	34.80	50.5	159	38.00	50.5	159	35.60	50.5	159	35.70	50.5	159	-	-	-
50	2"	50	32	47.50	64	158.75	56.30	77.5	190	47.50	64	190	50.00	64	190	48.60	64	190	47.80	64	190	-	-	-
65	2 ½"	80	62	60.20	77.5	193.68	72.10	91	216	60.20	77.5	216	66.00	91	216	60.30	77.5	216	59.50	77.5	216	-	-	-
80	3"		62	72.90	91	222.25	84.30	106	254	72.90	91	254	81.00	106	254	72.90	91	254	72.30	91	254	-	-	-
100	4"	100	76	97.38	119	292.1	109.70	144.5	305	97.38	119	305	100.00	119	305	97.60	119	305	97.60	119	305	-	-	-

Dimensions in mm
MG = diaphragm size

Aseptic clamps

Aseptic clamping connections to DIN 11864-3-A complement the existing clamping connection options. Either grooved clamps or notched clamps are welded onto the base of the DIN or ISO butt weld spigot body on both sides. If the valve is to have a grooved clamp on one side and a notched clamp on the other side, this is defined by the corresponding code. Other types of connection, such as the combination of an aseptic clamp and butt weld spigot, are possible in principle and are each individually defined depending on requirements.

Aseptic clamping connection DIN 11864-3-A	Code	
	Pipe	
	DIN	ISO
Grooved aseptic clamp on both sides	E1	E4
Notched aseptic clamp on both sides	E2	E5
One side grooved aseptic clamp, other side notched aseptic clamp	E3	E6

Dairy pipe and aseptic unions

The dairy pipe union to DIN 11851 and the aseptic pipe union to DIN 11864-1-A are also standard connections. If the valve is to have a threaded spigot at one connection and a conical coupling or liner with union nuts at the other side, this is defined by the corresponding code. Furthermore, other versions customary on the market can also be adapted.

Unions to DIN 11851	Code
Threaded spigot on both sides	6
Threaded spigot on one side, cone spigot with union nut on the other side	62

Aseptic pipe union DIN 11864-1-A	Code	
	Pipe	
	DIN	ISO
Aseptic threaded spigot on both sides	C1	C4
Aseptic unions with union nuts on both sides	C2	C5
One side aseptic threaded spigot, other side aseptic union with union nut	C3	C6

Aseptic flanges

Aseptic flanges to DIN 11864 -2 complement the existing standard connection options. Either grooved flanges on both sides or loose flanges are welded onto the base of the DIN or ISO butt weld spigot body. If the valve is to have a grooved flange at one connection and a loose flange at the other side, this is defined by the corresponding code. Other connections, such as the combination of an aseptic flange and butt weld spigot, are possible in principle and are each individually defined depending on requirements.

Aseptic flange DIN 11864-2-A	Code	
	Pipe	
	DIN	ISO
Grooved aseptic flange on both sides	A1	A4
Loose aseptic flange on both sides	A2	A5
One side grooved aseptic flange, other side loose aseptic flange	A3	A6

Materials and certificates

Type	Designation of the test certificate in accordance with EN 10204	Content of the certificate	Confirmation of the certificate by
2.1	Certificate of compliance with the order	Confirmation of compliance with the order	the manufacturer
2.2	Test report	Confirmation of compliance with the order with specification of results of non-specific testing	the manufacturer
3.1	Inspection certificate 3.1	Confirmation of compliance with the order with specification of results of specific testing	the manufacturer acceptance officer independent of the production division
3.2	Inspection certificate 3.2	Confirmation of compliance with the order with specification of results of specific testing	the manufacturer acceptance officer independent of the production division and the acceptance officer commissioned by the purchaser or the acceptance officer named in the official regulations

The table above provides an overview of the possible certificates which are generally available. The type of certificate and its content must be specified exactly before ordering to be able to provide the required documents. Later requests of certificates may not be possible or possible only under certain conditions.

Our specialists are happy to answer any questions you might have.

How to order / Type key

Order example for manual diaphragm valves:

Valve type	Nominal size DN	Body configuration	Connection (body)	Valve body material	Diaphragm material	Control function	Operator size	Additional data
A	B	C	D	E	F	G	H	K
673	25	D	60	40	17	0	2TS	1503

Order example for pneumatic diaphragm valves:

Valve type	Nominal size DN	Body configuration	Connection (body)	Valve body material	Diaphragm material	Control function	Operator size	Design (operator)	Spring set	Additional data
A	B	C	D	E	F	G	H	I*	J*	K
650	25	D	60	40	17	1	2	D	1	1503

* only for T valves

Order example for motorized diaphragm valves:

Valve type	Nominal size DN	Body configuration	Connection (body)	Valve body material	Diaphragm material	Supply voltage	Mains frequency	Type of design	Additional data
A	B	C	D	E	F	G	H	I	K
698	25	D	60	40	17	L	4	AE	1503

Kv value

Kv value

In order to be able to compare the extremely varied geometries, valve designs and nominal sizes of different equipment and valves, they are always tested and measured under the same conditions. As a result of test conditions such as these, a flow rate that is specific to each valve is obtained and this flow rate can also serve as a calculation basis for planning a plant, for example.

The Kvs values stated below are only valid for 2/2-way valves.

Kvs value

The KVS value is the KV value when the valve is fully open (100%). The KVS value (nominal flow coefficient) corresponds to the KV100 value with a tolerance of ±10% (to DIN EN 60534).

Medium:	*Water (H_2O)*
Temperature:	*5 to 30 °C*
Flow rate:	*The differential pressure Δp between the pressure input and pressure output side is 1 bar.*
Measurement unit:	*measured in m^3/h*

Cv value: measured in US gallons per minute, at a differential pressure Δp of 1 PSI with water.

1 Cv = 1.17 x Kv	1 Kv = 0.86 x Cv

			Butt weld spigots according to pipe standard						
Diaphragm size	DN	Size	DIN Code 0 Kvs [m^3/h]	DIN 11850 Series 1 Code 16 Kvs [m^3/h]	DIN 11850 Series 2 Code 17 Kvs [m^3/h]	DIN 11850 Series 3 Code 18 Kvs [m^3/h]	SMS3008 Code 37 Kvs [m^3/h]	ASME BPE Code 59 Kvs [m^3/h]	EN ISO 1127 Code 60 Kvs [m^3/h]
MG 8	4	⅛"	0.5	-	-	-		-	-
	6	1/6"	1.1	-	-	-		-	1.2
	8	¼"	1.3	-	-	-	-	0.6	2.2
	10	⅜"	-	2.1	2.1	2.1	-	1.3	-
	15	½"	-	-	-	-	-	2	-
MG 10	10	⅜"	-	2.4	2.4	2.4	-	2.2	3.3
	15	½"	3.3	3.8	3.8	3.8	-	2.2	4
	20	¾"	-	-	-	-	-	3.8	-
MG 25	15	½"	4.1	4.7	4.7	4.7	-	-	7.4
	20	¾"	6.3	7	7	7	-	4.4	13.2
	25	1"	13.9	15	15	15	12.6	12.2	16.2
MG 40	32	1¼"	25.3	27	27	27	26.2	-	30
	40	1½"	29.3	30.9	30.9	30.9	30.2	29.5	32.8
MG 50	50	2"	46.5	48.4	48.4	48.4	51.7	50.6	55.2
MG 80	65	2½"	-	-	77	-	68.5	68.5	96
	80	3"	-	-	111	-	80	87	111
MG 100	100	4"	-	-	194	-	173	188	214

Notes:
For BS 4825 (Code 55) the Kvs values are the same or slightly higher than ASME BPE as the pipe internal diameters are almost identical. For JIS-G 3459 (Code 36) the Kvs values are the same or slightly lower than EN ISO 1127 as the pipe internal diameters are almost identical. Kvs values for clamp connections always refer to the corresponding pipe standard. Kvs values were determined with water at 20°C, P1 = 6bar, P2 = 5bar, EPDM Code 13 diaphragm, tolerance ± 10%.
Kvs values for PTFE diaphragms may be lower especially at lower operating pressures as the material is stiffer.
The operating pressure influences the Kv value.

Pressure loss	Kv	for water	for liquid	for steam	for gases
$\Delta p < \frac{p_1}{2}$ $\left(p_2 > \frac{p_1}{2}\right)$	Kv	$= \frac{Q}{\sqrt{\Delta p}}$	$= \frac{Q}{31.6} \cdot \sqrt{\frac{\rho_1}{\Delta p}}$	$= \frac{\dot{M}}{31.6} \cdot \sqrt{\frac{v'}{\Delta p}}$	$= \frac{Q_n}{514} \cdot \sqrt{\frac{\rho_n \cdot T_1}{\Delta p \cdot p_2}}$
$\Delta p > \frac{p_1}{2}$ $\left(p_2 < \frac{p_1}{2}\right)$	Kv	$= \frac{Q}{\sqrt{\Delta p}}$	$= \frac{Q}{31.6} \cdot \sqrt{\frac{\rho_1}{\Delta p}}$	$= \frac{\dot{M}}{31.6} \cdot \sqrt{\frac{2 \cdot v''}{p_1}}$	$= \frac{Q_n}{257 \cdot p_1} \cdot \sqrt{\rho_n \cdot T_1}$

Kv	m^3/h	flow coefficient of the valve	ρ_1	kg/m^3	density of the material in the operating state T_1 and p_2
Q	m^3/h	flow rate	ρn	kg/m^3	density of the gas at 0°C and 1014 mbar
Qn	m^3/h	volumetric flow of the gas at 0°C and 1014 mbar	v'	m^3/kg	spec. steam volume at T_1 and p_2
p_1	bar	absolute pressure before the valve (at Q)	v"	m^3/kg	spec. steam volume at $\frac{p_1}{2}$ and T_1
p_2	bar	absolute pressure after the valve (at Q)	$\dot{M}$	kg/h	mass flow
Δp	bar	(Δp) - pressure differential p_1 - p_2 at Q	T_1	K	medium temperature

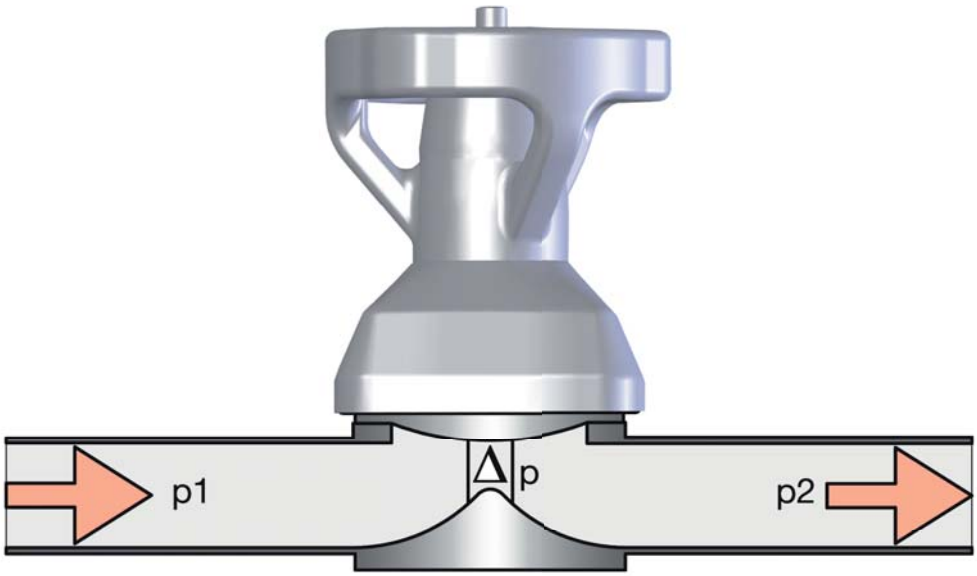

GEMÜ angle gauge

GEMÜ has developed a patented angle gauge to simplify mounting 2/2-way stainless steel diaphragm valve bodies. The angle gauge enables quick and simple determination of the correct mounting position of a diaphragm valve body. The angle gauge is placed on the valve body so that its location spigots engage in the holes intended for actuator fixing. It is then locked by an eccentric cam at one of the location spigots. The flow direction is clearly identified to prevent incorrect positioning. The correct installation angle, dependent on the valve body type, is indicated in the brochure "2/2-Way and T Valve Bodies in Stainless Steel". The given angle is set on the angle gauge. The valve body is rotated until the spirit is level. Then the body can be installed in the piping. The angle gauge is available for diaphragm sizes MG 8 - 100.

Please use the article numbers listed below when ordering:

Angle gauge for diaphragm size 8: 88278996

Angle gauge for diaphragm size 10: 88277372

Angle gauge for diaphragm size 25: 88277373

Angle gauge for diaphragm size 40: 88277374

Angle gauge for diaphragm size 50: 88277375

Angle gauge for diaphragm size 80: 88277376

Angle gauge for diaphragm size 100: 88379424

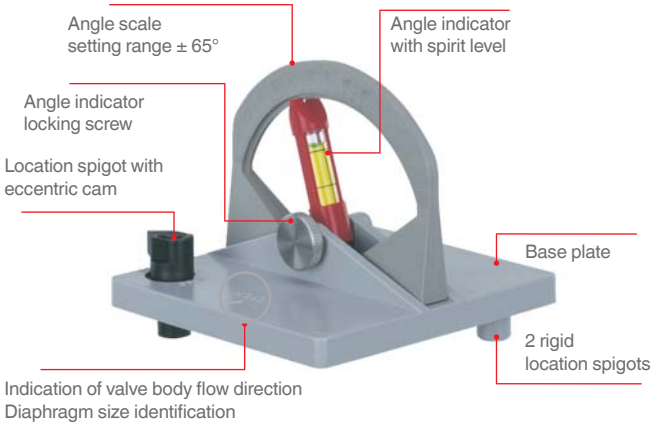

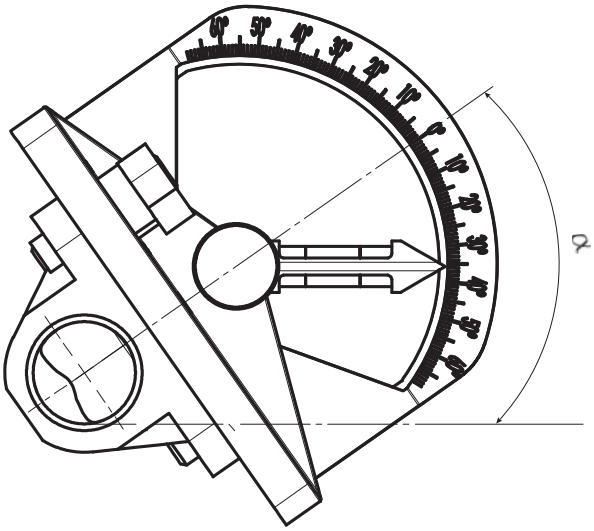

Distributed by:

Tri-Canada

1000 Edgeley Blvd. #2, Vaughan, ON L4K 4V4
Tel: **905.677.9000** • Toll Free: **1.800.486.7863**
www.tricanada.com

TÜVRheinland® CERT ISO 9001

TÜVRheinland® CERT ISO 14001

Subject to alteration · 04/2016 · 88279738

GEMÜ Gebr. Müller Apparatebau GmbH & Co. KG
Fritz-Müller-Straße 6-8 · D-74653 Ingelfingen-Criesbach
Phone +49 (0)7940 123-0 · info@gemue.de

*www.**gemu-group**.com*