Distributed by:

Tri-Canada

1000 Edgeley Blvd. #2, Vaughan, ON L4K 4V4
Tel: 905.677.9000 • Toll Free: 1.800.486.7863
www.tricanada.com

GEMÜ®

VALVES, MEASUREMENT AND CONTROL SYSTEMS

2/2-Way and T Valve Bodies
in Stainless Steel

Leading the world in pharmaceutical and biotechnology industry sterilisation processes

GEMÜ is one of the leading manufacturers of valves, measurement and control systems and is the world market leader for sterile valve applications in the pharmaceutical and biotechnology industries. This position is based on GEMÜ's comprehensive investments in application-oriented research & development, amounting to more than 5% of the company's turnover.

Customized solutions for your project business

GEMÜ provides the optimal solution from a single source.

As a system supplier of isolation, actuator and control technology, we can respond very flexibly to your individual project-specific needs.

Our worldwide sales network provides fast reaction times, customer oriented service and a committed project management team.

Table of contents

2/2-Way Valve Bodies

Description of use 4
Material selection 5
Grades of surface finish 6
Butt weld connections 7
Selection of operators 8 - 10
Butt weld spigots for EN ISO 1127 pipes , code 60 11
Butt weld spigots for DIN pipes, code 0 12
Butt weld spigots for DIN 11850 pipes, series 1, code 16 13
Butt weld spigots for DIN 11850 pipes, series 2, code 17; DIN 11866, series A, code 1A 14
Butt weld spigots for DIN 11850 pipes, series 3, code 18 15
Butt weld spigots for ASME BPE pipes, code 59 16
Butt weld spigots for BS 4825 pipes, code 55 17
Butt weld spigots for JIS-G 3447 pipes, code 35 18
Butt weld spigots for JIS-G 3459 pipes, code 36 19
Butt weld spigots for SMS 3008 pipes, code 37 20
Clamp bodies 21
Clamps ASME BPE for ASME BPE pipes, short design, code 80 22
Clamps following ASME BPE for EN ISO 1127 pipes, code 82 23
Clamps ASME BPE for ASME BPE pipes, code 88 24
Clamps DIN 32676 for DIN 11850 pipes, code 8A 25
Clamps SMS 3017 for SMS 3008 pipes, code 8E 26
Clamps IDF/ISO for JIS-G 3447 pipes, code 8F 27
Clamps IDF/ISO for JIS-G 3459 pipes, code 8H 28
Clamp ASME BPE (short design), code 80 - butt weld spigot ASME BPE, code 59 29
Clamp ASME BPE, length EN 558-1 series 7, code 82 - butt weld spigot EN ISO 1127, code 60 30
Clamp ASME BPE, length EN 558-1 series 7, code 88 - butt weld spigot ASME BPE, code 59 31
Clamp DIN 32676, code 8A - butt weld spigot DIN 11850 series 1, code 16 32
Clamp DIN 32676, code 8A - butt weld spigot DIN 11850 series 2, code 17 33
Clamp DIN 32676, code 8A - butt weld spigot DIN 11850 series 3, code 18 34
Clamp IDF/ISO for JIS-G 3447 pipes, code 8F - butt weld spigot JIS-G 3447, code 35 35
Clamp IDF/ISO for JIS-G 34597 pipes, code 8H - butt weld spigot JIS-G 3459, code 36 36
Clamp SMS 3017, length EN 558-1 series 7, code 8E - butt weld spigot SMS 3008, code 37 37
Aseptic clamps 38
Dairy pipe and aseptic unions 39
Aseptic flanges 40
Kv value 41
Order code 42
Angle of rotation for optimum draining 43
GEMÜ angle gauge 44

T valve bodies

Description of use 45
Material selection 46
Grades of surface finish 47
T valve bodies for sampling, body version "A" 48
T valve bodies for EN ISO 1127 pipes, DN 6 - DN 150 49 - 51
T valve bodies for DIN pipes, DN 6 - DN 150 52 - 55
T valve bodies for ASME - BPE pipes, DN 8 - DN 150 56 - 57
T valve bodies for JIS-G3447 pipes, DN 25 - DN 100 58
T valve bodies for JIS-G3459 pipes, DN 6 - DN 100 59 - 61
T valve bodies for SMS 3008 pipes, DN 25 - DN 100 62 - 63
T valve bodies with clamp connections 64
Order code 65
Materials and certificates 66
GEMÜ manufacturing sites and sales locations worldwide 67

Description of use
2/2-way valve bodies

2/2-way straight through valve bodies are the body versions used most often in industrial applications. Butt weld spigots and clamp connections are the most common connections in sensitive sterile areas

whereas threaded connections, aseptic flanges and threaded sockets only play a secondary role here.

Features

- *Standard valve body material 1.4435 in investment cast, forged or block material design.*
  1.4539 and other materials on request
- *Standard connections are butt weld spigots, clamps and sterile connections, other connections on request*
- *Internal surface contour mechanically polished and/or electropolished down to Ra 0.25 µm*
- *Compact design, GMP-compliant design*
- *Available with manual, pneumatic or motorized operators (modular system)*

Material selection
2/2-way valve bodies

Investment casting		
Material code	32	1.4435 (BN2) Fe < 0.5%
	34	1.4435 (ASTM A 351 CF3M)*

* Material equivalency 316 L

Forged body		
Material code	40	1.4435 (F316L)
	42	1.4435 (BN2) Fe<0,5%
	F4	1.4539 (F904L)

Block material		
Material code	41	1.4435 (316L/F316L)
	43	1.4435 (BN2) Fe<0,5%

Other valve body materials	Code
1.4539, block material	44
3.7035, titanium	A1
2.4602, block material Hastelloy C 22 (NiCr21Mo14W)	A3

Special materials on request

Grades of surface finish
2/2-way valve bodies

Valve body surface finish, internal contour			
	Forged body - Codes 40, 42, F4 Block material - Codes 41, 43	Investment casting Codes 32, 34	Code
Ra ≤ 0,8 µm (30 µinch) for media wetted surfaces, mechanically polished internal	X	X	1502
Ra ≤ 0,8 µm (30 µinch) for media wetted surfaces, electropolished internal/external	X	-	1503
Ra ≤ 0,6 µm (25 µinch) for media wetted surfaces, mechanically polished internal	X [1]	X [1]	1507
Ra ≤ 0,6 µm (25 µinch) for media wetted surfaces, electropolished internal/external	X [1]	-	1508
Ra ≤ 0,25 µm (10 µinch) for media wetted surfaces, electropolished internal/external	X [1]	-	1516
Ra ≤ 0,25 µm (10 µinch) for media wetted surfaces, mechanically polished internal	X [1]	-	1527
Ra ≤ 0,4 µm (15 µinch) for media wetted surfaces, mechanically polished internal	X [1]	-	1536
Ra ≤ 0,4 µm (15 µinch) for media wetted surfaces, electropolished internal/external	X [1]	-	1537
Ra ≤ 0,5 µm (20 µinch) for media wetted surfaces, mechanically polished internal	X [1]	-	1927
Ra ≤ 0,5 µm (20 µinch) for media wetted surfaces, electropolished internal/external	X [1]	-	1928
Ra ≤ 0,4 µm (15 µinch) for media wetted surfaces, electropolished internal/external	X [1]	-	1929

Ra acc. to DIN 4768; at defined reference points. [1] For pipe inside diameter< 6 mm, the surface inside the spigot is Ra ≤ 0.8 µm.

Modern, ergonomically shaped workstations and trained polishing staff give us the ability to provide high quality surface finishes. Depending on the required application, surface finishes from Ra 0.8 µm down to 0.25 µm can be achieved by polishing, electro polishing or a special process, we call “elysieren“.

Mechanical hand polishing is carried out at our works to ensure our high quality standard.

	GEMÜ DE	GEMÜ US	DIN 11866		ASME BPE (2014)		
Code	Ra µm	Ra_{max} µinch	Hygiene class	Ra µm	Designation	Ra_{max} µinch	Ra µm - converted
1502	≤ 0.8	30	H3	≤ 0.8	SF3	30	0.76
1503	≤ 0.8	30	HE3c	≤ 0.8	-	-	-
1508	≤ 0.6	25	-	-	SF6	25	0.64
1507	≤ 0.6	25	-	-	SF2	25	0.64
1537	≤ 0.4	20	HE4c	≤ 0.4	SF5	20	0.51
1536	≤ 0.4	20	H4	≤ 0.4	SF1	20	0.51
1527	≤ 0.25	15	H5	≤ 0.25	-	-	-
1516	≤ 0.25	15	HE5c	≤ 0.25	SF4	15	0.38

Butt weld connections

2/2-way valve bodies

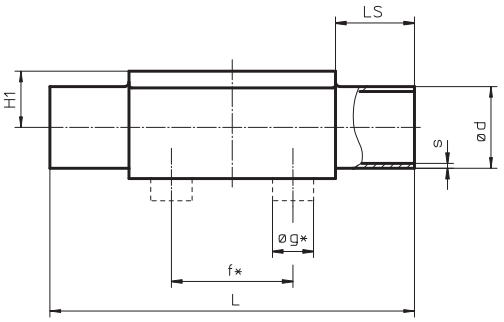

Dimensions in mm			DIN Series 0 / Code 0		DIN 11850 Series 1 / Code 16		Series 2 / Code 17		Series 3 / Code 18		DIN 11866 Series A Code 1A		Series B / Code 1B		EN ISO 1127 Code 60		JIS-G 3447 Code 35		JIS-G 3459 Code 36		SMS 3008 Code 37		BS 4825 Code 55		ASME BPE Code 59		ANSI/ ASME B36.19M 10s Code 63		ANSI/ ASME B36.19M 40s Code 65	
MG	DN	NPS	ød	s	ød	s	ød	s	ød	s	ød	s	ød	s	ød	s	ød	s	ød	s	ød	s	ød	s	ød	s	ød	s	ød	s
8	4	-	6	1.0	-	-	-	-	-	-	-	-	-	-	-	-	-	-	-	-	-	-	-	-	-	-	-	-	-	-
	6	-	8	1.0	-	-	-	-	-	-	8	1.0	10.2	1.6	10.2	1.6	-	-	10.5	1.20	-	-	-	-	-	-	10.3	1.24	10.3	1.73
	8	¼"	10	1.0	-	-	-	-	-	-	10	1.0	13.5	1.6	13.5	1.6	-	-	13.8	1.65	-	-	6.35	1.2	6.35	0.89	13.7	1.65	13.7	2.24
	10	⅜"	-	-	12	1.0	13	1.5	14	2.0	13	1.5	-	-	-	-	-	-	-	-	-	-	9.53	1.2	9.53	0.89	-	-	-	-
	15	½"	-	-	-	-	-	-	-	-	-	-	-	-	-	-	-	-	-	-	-	-	12.70	1.2	12.70	1.65	-	-	-	-
10	10	⅜"	-	-	12	1.0	13	1.5	14	2.0	13	1.5	17.2	1.6	17.2	1.6	-	-	17.3	1.65	-	-	9.53	1.2	9.53	0.89	17.1	1.65	17.1	2.31
	15	½"	18	1.5	18	1.0	19	1.5	20	2.0	19	1.5	21.3	1.6	21.3	1.6	-	-	21.7	2.10	-	-	12.70	1.2	12.70	1.65	21.3	2.11	21.3	2.77
	20	¾"	-	-	-	-	-	-	-	-	-	-	-	-	-	-	-	-	-	-	-	-	19.05	1.2	19.05	1.65	-	-	-	-
25	15	½"	18	1.5	18	1.0	19	1.5	20	2.0	19	1.5	21.3	1.6	21.3	1.6	-	-	21.7	2.10	-	-	-	-	-	-	21.3	2.11	21.3	2.77
	20	¾"	22	1.5	22	1.0	23	1.5	24	2.0	23	1.5	26.9	1.6	26.9	1.6	-	-	27.2	2.10	-	-	19.05	1.2	19.05	1.65	26.7	2.11	26.7	2.87
	25	1"	28	1.5	28	1.0	29	1.5	30	2.0	29	1.5	33.7	2.0	33.7	2.0	25.4	1.2	34.0	2.80	25.0	1.2	-	-	25.40	1.65	33.4	2.77	33.4	3.38
40	32	1 ¼"	34	1.5	34	1.0	35	1.5	36	2.0	35	1.5	42.4	2.0	42.4	2.0	31.8	1.2	42.7	2.80	33.7	1.2	-	-	-	-	42.2	2.77	42.2	3.56
	40	1 ½"	40	1.5	40	1.0	41	1.5	42	2.0	41	1.5	48.3	2.0	48.3	2.0	38.1	1.2	48.6	2.80	38.0	1.2	-	-	38.10	1.65	48.3	2.77	48.3	3.68
50	50	2"	52	1.5	52	1.0	53	1.5	54	2.0	53	1.5	60.3	2.0	60.3	2.0	50.8	1.5	60.5	2.80	51.0	1.2	-	-	50.80	1.65	60.3	2.77	60.3	3.91
80	65	2 ½"	-	-	-	-	70	2.0	-	-	70	2.0	76.1	2.0	76.1	2.0	63.5	2.0	76.3	3.0	63.5	1.6	-	-	63.5	1.65	73.0	3.05	73.0	5.16
	80	3"	-	-	-	-	85	2.0	-	-	85	2.0	88.9	2.3	88.9	2.3	76.3	2.0	89.1	3.0	76.1	1.6	-	-	76.2	1.65	88.9	3.05	88.9	5.49
100	100	4"	-	-	-	-	104	2.0	-	-	104	2.0	114.3	2.3	114.3	2.3	101.6	2.0	114.3	3.0	101.6	2.0	-	-	101.6	2.11	114.3	3.05	114.3	6.02

MG = diaphragm size

* only for investment cast body
The angles of rotation for installation can be seen from the connection drawings on the following pages.

The difference between tube specifications (Example DN 15)

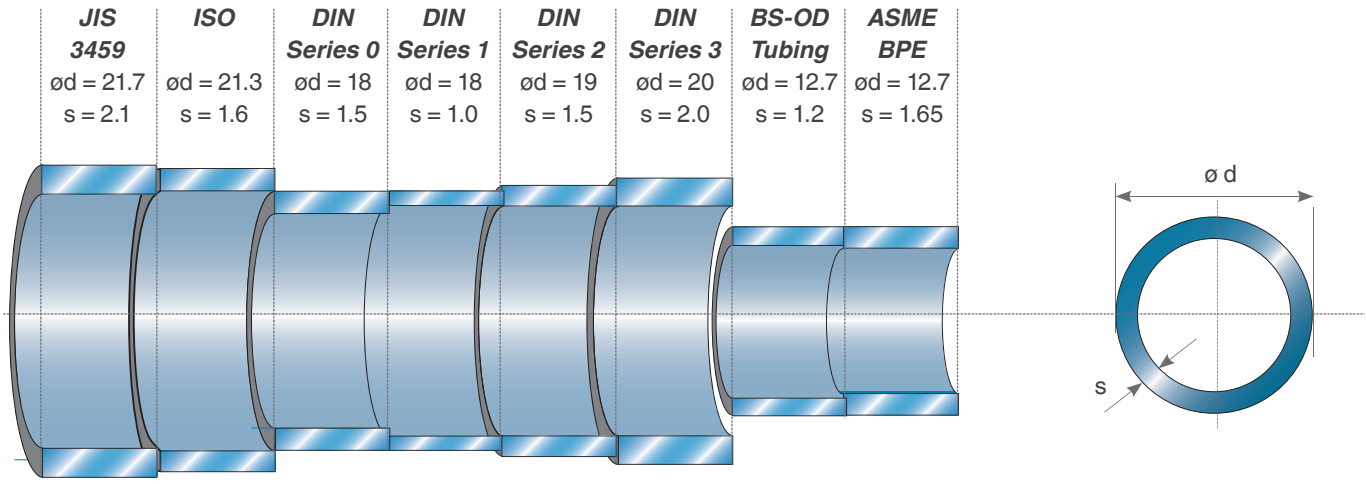

Selection of operators
2/2-way valve bodies

	Manually operated					
Type	**GEMÜ 9601**	**GEMÜ 9602**	**GEMÜ 9612**	**GEMÜ 9673**	**GEMÜ 9653**	**GEMÜ 9654**
Material	Stainless steel, plastic handwheel, with optical position indicator and seal adjuster	Stainless steel, with optical position indicator and seal adjuster	Stainless steel, plastic handwheel, with optical position indicator and seal adjuster	Stainless steel, plastic handwheel, with optical position indicator and seal adjuster	Stainless steel, plastic handwheel, with optical position indicator, stroke limiter and seal adjuster, lockable, optional: electrical position indicator	Stainless steel, with optical position indicator, stroke limiter and seal adjuster, lockable, optional: electrical position indicator
Autoclavable	●	●	●	●	●	●
Operating temperature*	-10 to 150 °C	-10 to 150 °C	-10 to 150 °C	-10 to 150 °C	-10 to 150 °C	-10 to 150 °C
Operating pressure*	0 to 10 bar	0 to 10 bar	0 to 10 bar	0 to 10 bar	0 to 10 bar	0 to 10 bar
DN	4 - 15	4 - 15	10 - 20	15 - 50	10 - 100	4 - 100
Diaphragm size 8	●	●	-	-	-	●
Diaphragm size 10	-	-	●	-	●	●
Diaphragm size 25	-	-	-	●	●	●
Diaphragm size 40	-	-	-	●	●	●
Diaphragm size 50	-	-	-	●	●	●
Diaphragm size 80	-	-	-	-	●	●
Diaphragm size 100	-	-	-	-	●	●

* dependent on diaphragm material, see technical datasheet

Elastomer diaphragms
EPDM

PTFE diaphragms
PTFE/EPDM, PTFE/FPM

Pneumatically operated							
GEMÜ 9605	**GEMÜ 9625**	**GEMÜ 9687**	**GEMÜ 9650**	**GEMÜ 9650TL**	**GEMÜ 9651**	**GEMÜ 9658/9688**	**GEMÜ 9660**
Plastic, with stainless steel distance piece, optical position indicator	Plastic, with stainless steel distance piece, optical position indicator	Plastic, with stainless steel distance piece, optical position indicator	Stainless steel, with optical position indicator, optionally autoclavable	Safety valve, stainless steel, mounting facility for proximity switches	Stainless steel, with integrated automation module	Two stage actuator, stainless steel	Filling valve, stainless steel with optical position indicator, stroke limiter and seal adjuster
-	-	-	● (DN 4-25)	-	-	-	-
-10 to 150 °C	-10 to 150 °C	-10 to 150 °C	-10 to 150 °C	-10 to 150 °C	-10 to 150 °C	-10 to 150 °C	-10 to 150 °C
0 to 8 bar	0 to 6 bar	0 to 10 bar	0 to 10 bar	0 to 8 bar	0 to 10 bar	0 to 10 bar	0 to 5 bar
4 - 15	10 - 20	10 - 100	4 - 100	4 - 25	4 - 25	10 - 50	4 - 25
●	-	-	●	●	●	●	●
-	●	●	●	●	●	●	●
-	-	●	●	●	●	●	●
-	-	●	●	-	-	●	-
-	-	●	●	-	-	●	-
-	-	●	●	-	-	-	-
-	-	●	●	-	-	-	-

Valve body versions

2/2-way body
investment casting
2/2-way version to all
international standard
butt weld connections

2/2-way body
forged version
2/2-way version to all
international standard
butt weld connections

Connections

Clamps
to all common standards

Aseptic clamps
to all common standards

Aseptic unions
to all common standards

Aseptic flanges
to all common standards

Other versions and accessories available. See "Stainless Steel Diaphragm Valves" brochure.

Selection of operators
2/2-way valve bodies

	Pneumatically operated		Motorized	
Type	**GEMÜ 9615**	**GEMÜ 9695**	**GEMÜ 9618**	**GEMÜ 9698**
Material	Plastic, with optical position indicator, only for 2/2-way valve bodies	Plastic, with optical position indicator, only for 2/2-way valve bodies	Plastic, with/without stainless steel distance piece, with optical position indicator	Plastic, with stainless steel distance piece, with optical position indicator and manual override
Autoclavable	-	-	-	-
Operating temperature*	-10 to 80 °C	-10 to 80 °C	0 to 130 °C (without distance piece 15 to 50 °C)	-10 to 150 °C
Operating pressure*	0 to 6 bar	0 to 10 bar	0 to 6 bar	0 to 6 bar
DN	10 to 20	15 to 50	4 - 15	15 - 50
Supply voltage	-	-	24 VAC, 120 VAC, 230 VAC, 50/60Hz	24 VAC, 120 VAC, 230 VAC, 50/60Hz
Diaphragm size 8	-	-	●	-
Diaphragm size 10	●	-	●	-
Diaphragm size 25	-	●	-	●
Diaphragm size 40	-	●	-	●
Diaphragm size 50	-	●	-	●
Diaphragm size 80	-	-	-	-
Diaphragm size 100	-	-	-	-

* dependent on diaphragm material

Angle of rotation
for optimum draining

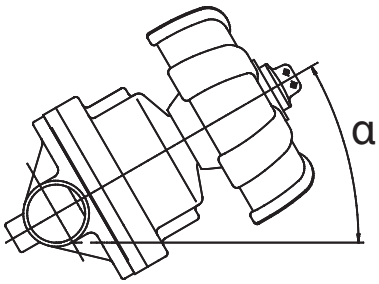

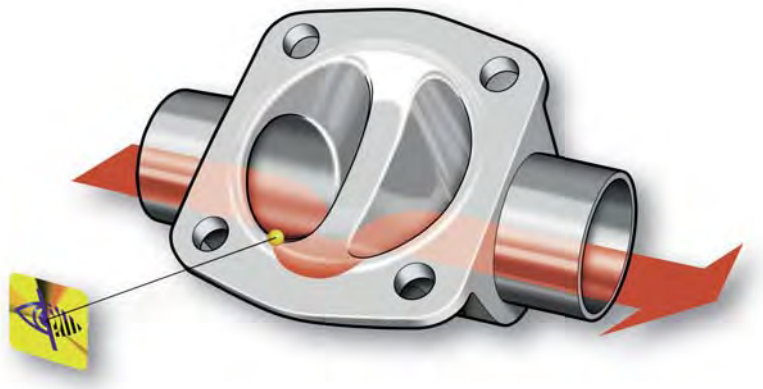

In the pharmaceutical and biotechnological industries and other sensitive industrial sectors the drainability and cleanability of plant plays an important role. Very often plants are cleaned and sterilised after every production process. The objective is to keep the residue as low as possible in order to optimise the sterilisation and cleaning processes of plant and piping systems.
In specialist literature and documents from plant constructors and valve manufacturers the term “self-draining“ is often used in this context. It is a ficticious term for the independent emptying of a vessel and/or a pipe section through an opened valve. Depending on a variety of factors it is however not normally possible to expect full drainage without leaving residue even with vertical piping. Therefore the term “self-draining“ is often used incorrectly. The term “free outlet“, “unhindered outlet“ or “optimum draining“ is more realistic. At GEMÜ we use the term optimum draining.

Optimum drainability of a valve depends on several factors:

- *Design of the internal geometry of the valve body*
- *Different pipe standards (ISO, DIN, SMS, ASME BPE, JIS etc.), as they have different inside diameters at the same nominal size*
- *Installation position in the pipeline with regard to horizontal rotation and vertical inclination*
- *Viscosity and adhesive qualities of the medium/media*

Diaphragm valves offer the best structural conditions for an unhindered outlet of the working medium when the valve is open. In an ideal case, the pipe and the valve are vertical. However, if the pipe is horizontal, the valve must be turned axially in the pipe until the outermost point of the sealing weir corresponds to the lowest point of the connecting pipe. Thus the working medium can optimally flow around the weir. The only way to gain the necessary viewing point to set the rotation angle is to remove the operator (manual bonnet or actuator) prior to installing the valve. Optical alignment is often sufficient – it must be noted, however, that the eyes of the viewer must be in line with the transition of the weir and the lowest point of the pipe. Dependent on the viscosity of the working medium or the required outlet velocity, the pipe runs should have a corresponding gradient (pipe inclination).

GEMÜ has calculated draining angles for the various nominal sizes and pipe standards in order to facilitate installation of valves for optimised draining. The draining angles mentioned are valid for installation in horizontal pipe systems. The GEMÜ angle α is quoted from when the valve is lying on its side with a vertical weirplate and the rotation angle is UPWARDS. Please note the drawing. (Attention: Other manufacturers quote the angle using a horizontal weirplate from the vertical centreline downwards).
The draining angles mentioned in this brochure are valid for valve bodies produced in the EU. Please contact your local supplier for further information.
The values of the draining angles are only provided as a guide without tolerances. Drainability in a plant is the responsibility of the plant designer, plant constructor and end user due to factors described previously.

GEMÜ angle gauge

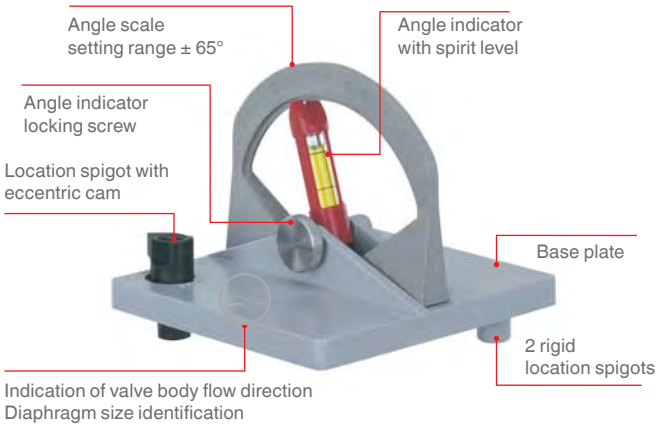

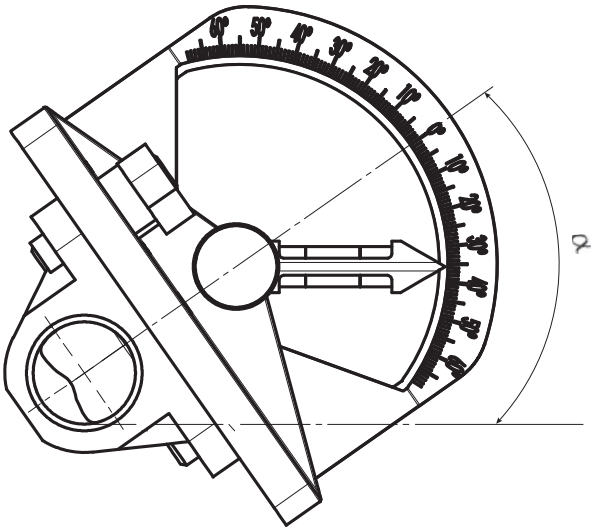

GEMÜ has developed a patented angle gauge to simplify mounting 2/2-way stainless steel diaphragm valve bodies. The angle gauge enables quick and simple determination of the correct mounting position of a diaphragm valve body. The angle gauge is placed on the valve body so that its location spigots engage in the holes intended for actuator fixing. It is then locked by an eccentric cam at one of the location spigots. The flow direction is clearly identified to prevent incorrect positioning. The correct installation angle, dependent on the valve body type, is indicated in this brochure. The given angle is set on the angle gauge. The valve body is rotated until the spirit is level. Then the body can be installed in the piping. The angle gauge is available for diaphragm sizes MG 8 - 100.

Please use the article numbers listed below when ordering:

Angle gauge for diaphragm size 8:	88278996
Angle gauge for diaphragm size 10:	88277372
Angle gauge for diaphragm size 25:	88277373
Angle gauge for diaphragm size 40:	88277374
Angle gauge for diaphragm size 50:	88277375
Angle gauge for diaphragm size 80:	88277376
Angle gauge for diaphragm size 100:	88379424

Distributed by:

Tri-Canada

1000 Edgeley Blvd. #2, Vaughan, ON L4K 4V4
Tel: **905.677.9000** • Toll Free: **1.800.486.7863**
www.tricanada.com

TÜVRheinland®
CERT
ISO 9001

TÜVRheinland®
CERT
ISO 14001

Subject to alteration · 04/2016 · 88471495

GEMÜ Gebr. Müller Apparatebau GmbH & Co. KG
Fritz-Müller-Straße 6-8 · D-74653 Ingelfingen-Criesbach
Phone +49 (0)7940 123-0 · info@gemue.de

*www.**gemu-group**.com*