Distributed by:

Tri-Canada

1000 Edgeley Blvd. #2, Vaughan, ON L4K 4V4
Tel: **905.677.9000** • Toll Free: **1.800.486.7863**
www.tricanada.com

GEMÜ®

VALVES, MEASUREMENT AND CONTROL SYSTEMS

2/2-Way and T Valve Bodies
in Stainless Steel

Leading the world in pharmaceutical and biotechnology industry sterilisation processes

GEMÜ is one of the leading manufacturers of valves, measurement and control systems and is the world market leader for sterile valve applications in the pharmaceutical and biotechnology industries. This position is based on GEMÜ's comprehensive investments in application-oriented research & development, amounting to more than 5% of the company's turnover.

Customized solutions for your project business

GEMÜ provides the optimal solution from a single source.

As a system supplier of isolation, actuator and control technology, we can respond very flexibly to your individual project-specific needs.

Our worldwide sales network provides fast reaction times, customer oriented service and a committed project management team.

Description of use
T valve bodies

GEMÜ® Seal system
CERTIFIED
EHEDG
EUROPEAN HYGIENIC ENGINEERING & DESIGN GROUP
TYPE EL
JUNE 2006

T valve bodies are preferably welded into ring mains with the outlet in a vertical direction. This allows the working medium to be drawn off or fed almost deadleg free.

Features

- *EHEDG-certified GEMÜ seal system*
- *Made from block material, no welds in the media wetted area (i. e. reduction of validation times)*
- *Compact design, GMP-compliant design*
- *Grades of surface finish: Internal contour mechanically polished and/or electropolished down to Ra 0.25 µm*
- *Standard valve body material 1.4435 (316L), other materials on request*
- *Standard connections are butt weld spigots, clamps and sterile connections, other connections on request*
- *Available with manual, pneumatic or motorized operators*

Material selection
T valve bodies

Investment casting		
Material code	32	1.4435 (BN2) Fe < 0.5%
	34	1.4435 (ASTM A 351 CF3M)*

* Material equivalency 316 L

Block material		
Material code	41	1.4435 (316L)
	43	1.4435 (BN2) Fe < 0.5%

Connections	Code
Butt weld spigots DIN	0
Butt weld spigots DIN 11850, series 1	16
Butt weld spigots DIN 11850, series 2	17
Butt weld spigots DIN 11866, series A	1A
Butt weld spigots DIN 11866, series B	1B
Butt weld spigots JIS-G 3447	35
Butt weld spigots JIS-G 3459	36
Butt weld spigots SMS 3008	37
Butt weld spigots ASME BPE	59
Butt weld spigots EN ISO 1127	60

Main pipe* DN 2 (mm)	Branch* DN 1 (mm)	Diaphragm size	For valve types
6 - 25	4 - 15	8	Specifications see brochure "Stainless Steel Diaphragm Valves"
10 - 65	4 - 20	10	
15 - 100	4 - 25	25	
32 - 150	32 - 40	40	
50 - 150	50	50	
65 - 150	65 - 80	80	
100 - 150	100	100	

*More combinations main pipe-branch possible on request

Grades of surface finish
T valve bodies

Valve body surface finish, internal contour			
	Forged body - Codes 40, 42 , F4 Block material - Codes 41, 43	Investment casting Codes 32, 34	Code
Ra ≤ 0.8 µm, mechanically polished internal, blasted external	X	X	1502
Ra ≤ 0.8 µm, electropolished internal/external	X	-	1503
Ra ≤ 0.6 µm, mechanically polished internal, blasted external	X [1]	X [1]	1507
Ra ≤ 0.6 µm, electropolished internal/external	X [1]	-	1508
Ra ≤ 0.4 µm, mechanically polished internal, blasted external	X [1]	-	1536
Ra ≤ 0.4 µm, electropolished internal/external	X [1]	-	1537
Ra ≤ 0.25 µm, mechanically polished internal, blasted external	X [1]	-	1527
Ra ≤ 0.25 µm, electropolished internal/external	X [1]	-	1516

Ra acc. to DIN 4768; at defined reference points. Surface finish data refers to media wetted surfaces.
[1] Not possible for connections DN 8 codes 55 and 59, DN 4 code 0 as well as all other connections Ø < 6 mm.

	GEMÜ DE	GEMÜ US	DIN 11866		ASME BPE (2014)		
Code	Ra µm	Ra_{max} µinch	Hygiene class	Ra µm	Designation	Ra_{max} µinch	Ra µm - converted
1502	≤ 0.8	30	H3	≤ 0.8	SF3	30	0.76
1503	≤ 0.8	30	HE3c	≤ 0.8	-	-	-
1508	≤ 0.6	25	-	-	SF6	25	0.64
1507	≤ 0.6	25	-	-	SF2	25	0.64
1537	≤ 0.4	20	HE4c	≤ 0.4	SF5	20	0.51
1536	≤ 0.4	20	H4	≤ 0.4	SF1	20	0.51
1527	≤ 0.25	15	H5	≤ 0.25	-	-	-
1516	≤ 0.25	15	HE5c	≤ 0.25	SF4	15	0.38

T valve bodies for sampling

Body version "A"

Dimension example for diaphragm size 10

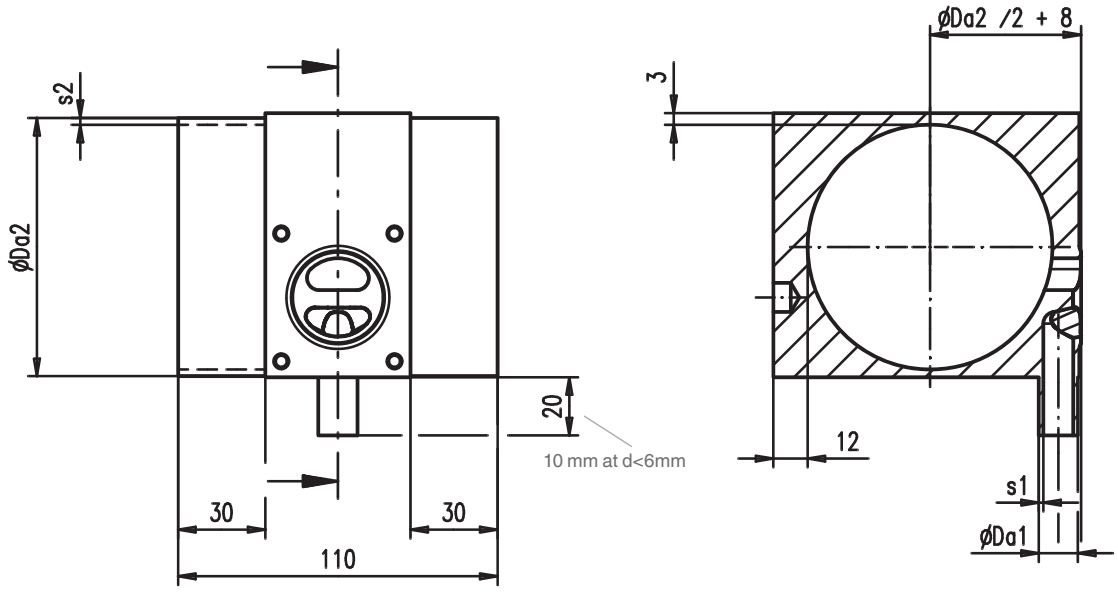

This particular design is used to take samples from large ring mains (≥ DN 50). A very good deadleg ratio is achieved as a result of the optimized contour. In comparison to the ring main cross section, the outlet branch has a small nominal size (≤ DN 15) and is provided with a diaphragm valve with a diaphragm size of 8 or 10.

Features

- *Cavity fully shaped, deadleg ratio < 1 x D*
- *Compact design*
- *Optimal draining if installed at an angle*

T valve bodies

for EN ISO 1127 pipes , DN 6 - DN 150

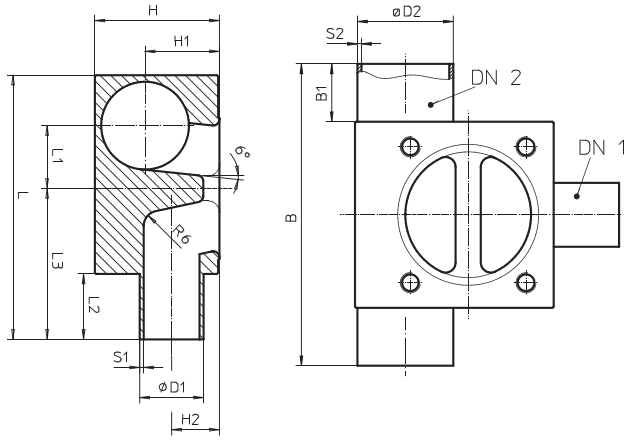

Valve body material	Code
1.4435 (BN2) Fe<0,5%	32
1.4435 (ASTM A 351 CF3M)*	34
1.4435 (316L/F316L)	41
1.4435 (BN2) Fe<0,5%	43

* Material equivalency 316 L
Special materials on request

The valve body dimensions for your order are clearly defined by specification of the codes in the fields with a coloured background in the given sequence.

Note:
Dimensions code 32 = dimensions code 34
Dimensions code 41 = dimensions code 43

Dimensions																			
DN 2	Code 2[1]	DN 1	Code 1[1]	MG[2]	WKZ[3]	D1 (mm)	S1 (mm)	D2 (mm)	S2 (mm)	L (mm)	L1 (mm)	L2 (mm)	L3 (mm)	H (mm)	H1 (mm)	H2 (mm)	B (mm)	B1 (mm)	G[4] (kg)
6	60	6	60	8	41	10.2	1.6	10.2	1.6	52.5	8.1	20.0	36.5	18.0	10.4	8.5	72.0	20.0	0.1
8	60	6	60	8	41	10.2	1.6	13.5	1.6	53.0	8.2	20.0	36.5	21.0	12.1	8.5	72.0	20.0	0.2
8	60	8	60	8	41	13.5	1.6	13.5	1.6	53.0	8.2	20.0	36.5	21.0	12.1	8.5	72.0	20.0	0.2
8	60	8	60	8	34*	13.5	1.6	13.5	1.6	52.0	8.5	20.0	36.0	21.0	14.0	8.5	72.0	20.0	0.2
10	60	6	60	8	41	10.2	1.6	17.2	1.6	57.0	10.3	20.0	36.5	24.0	13.9	8.5	72.0	20.0	0.2
10	60	8	60	8	41	13.5	1.6	17.2	1.6	57.0	10.3	20.0	36.5	24.0	13.9	8.5	72.0	20.0	0.2
10	60	10	60	10	41	17.2	1.6	17.2	1.6	76.0	11.0	20.0	48.5	27.0	16.2	12.5	90.0	20.0	0.5
15	60	6	60	8	41	10.2	1.6	21.3	1.6	62.0	12.5	20.0	36.5	29.0	16.0	8.5	72.0	20.0	0.3
15	60	8	60	8	41	13.5	1.6	21.3	1.6	62.0	12.5	20.0	36.5	29.0	16.0	8.5	72.0	20.0	0.3
15	60	10	60	10	41	17.2	1.6	21.3	1.6	76.0	13.2	20.0	48.5	31.0	18.3	12.5	90.0	20.0	0.6
15	60	15	60	10	41	21.3	1.6	21.3	1.6	76.0	13.2	20.0	48.5	31.0	18.3	12.5	90.0	20.0	0.6
15	60	15	60	25	41	21.3	1.6	21.3	1.6	88.0	21.2	20.0	54.0	34.0	21.5	19.0	114.0	20.0	1.1
20	60	6	60	8	41	10.2	1.6	26.9	1.6	68.0	15.7	20.0	36.5	34.0	18.8	8.5	82.0	25.0	0.3
20	60	8	60	8	41	13.5	1.6	26.9	1.6	68.0	15.7	20.0	36.5	34.0	18.8	8.5	82.0	25.0	0.3
20	60	10	60	10	41	17.2	1.6	26.9	1.6	80.0	16.3	20.0	48.5	36.0	21.1	12.5	100.0	25.0	0.7
20	60	15	60	10	41	21.3	1.6	26.9	1.6	80.0	16.3	20.0	48.5	36.0	21.1	12.5	100.0	25.0	0.7
20	60	15	60	25	41	21.3	1.6	26.9	1.6	88.0	18.8	20.0	54.0	40.0	24.3	19.0	124.0	25.0	1.2
20	60	20	60	25	41	26.9	1.6	26.9	1.6	93.0	18.8	25.0	59.0	40.0	24.3	19.0	124.0	25.0	1.2
25	60	6	60	8	41	10.2	1.6	33.7	2.0	74.0	19.0	20.0	36.5	41.0	22.2	8.5	82.0	25.0	0.5
25	60	8	60	8	41	13.5	1.6	33.7	2.0	74.0	19.0	20.0	36.5	41.0	22.2	8.5	82.0	25.0	0.5
25	60	10	60	10	41	17.2	1.6	33.7	2.0	87.0	19.7	20.0	48.5	43.0	24.5	12.5	100.0	25.0	0.9
25	60	15	60	10	41	21.3	1.6	33.7	2.0	87.0	19.7	20.0	48.5	43.0	24.5	12.5	100.0	25.0	0.9
25	60	15	60	25	41	21.3	1.6	33.7	2.0	95.0	22.2	20.0	54.0	46.0	27.7	19.0	124.0	25.0	1.5

Other combinations on request
[1] see Butt weld spigots table on page 7, [2] MG = diaphragm size, [3] WKZ = valve body material code, [4] G = valve body weight.
* Attention: The external geometry does not correspond to the drawing shown.
Note: Dimensions for code 1B (DIN 11864 series B) correspond to code 60.

Continued on the next page

T valve bodies

for EN ISO 1127 pipes , DN 6 - DN 150

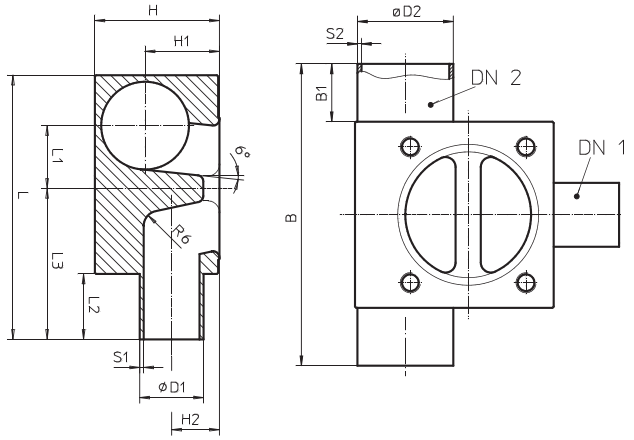

Valve body material	Code
1.4435 (BN2) Fe<0,5%	32
1.4435 (ASTM A 351 CF3M)*	34
1.4435 (316L/F316L)	41
1.4435 (BN2) Fe<0,5%	43

* Material equivalency 316 L
Special materials on request

The valve body dimensions for your order are clearly defined by specification of the codes in the fields with a coloured background in the given sequence.

Note:
Dimensions code 32 = dimensions code 34
Dimensions code 41 = dimensions code 43

Dimensions																			
DN 2	Code 2[1]	DN 1	Code 1[1]	MG[2]	WKZ[3]	D1 (mm)	S1 (mm)	D2 (mm)	S2 (mm)	L (mm)	L1 (mm)	L2 (mm)	L3 (mm)	H (mm)	H1 (mm)	H2 (mm)	B (mm)	B1 (mm)	G[4] (kg)
25	60	20	60	25	41	26.9	1.6	33.7	2.0	100.0	22.2	25.0	59.0	46.0	27.7	19.0	124.0	25.0	1.5
25	60	25	60	25	41	33.7	2.0	33.7	2.0	100.0	22.2	25.0	59.0	46.0	27.7	19.0	124.0	25.0	1.5
32	60	8	60	10	41	13.5	1.6	42.4	2.0	96.0	24.5	20.0	48.5	52.0	28.8	12.5	100.0	25.0	1.2
32	60	10	60	10	41	17.2	1.6	42.4	2.0	96.0	24.5	20.0	48.5	52.0	28.8	12.5	100.0	25.0	1.2
32	60	15	60	10	41	21.3	1.6	42.4	2.0	96.0	24.5	20.0	48.5	52.0	28.8	12.5	100.0	25.0	1.2
32	60	15	60	25	41	21.3	1.6	42.4	2.0	104.0	27.0	20.0	54.0	55.0	32.0	19.0	124.0	25.0	2.0
32	60	20	60	25	41	26.9	1.6	42.4	2.0	109.0	27.0	25.0	59.0	55.0	32.0	19.0	124.0	25.0	1.9
32	60	25	60	25	41	33.7	2.0	42.4	2.0	109.0	27.0	25.0	59.0	55.0	32.0	19.0	124.0	25.0	1.9
32	60	32	60	40	41	42.4	2.0	42.4	2.0	123.0	29.1	25.0	71.0	58.0	35.0	26.0	152.0	25.0	3.2
40	60	8	60	10	41	13.5	1.6	48.3	2.0	102.0	27.8	20.0	48.5	58.0	31.8	12.5	100.0	25.0	1.4
40	60	10	60	10	41	17.2	1.6	48.3	2.0	102.0	27.8	20.0	48.5	58.0	31.8	12.5	100.0	25.0	1.4
40	60	15	60	10	41	21.3	1.6	48.3	2.0	102.0	27.8	20.0	48.5	58.0	31.8	12.5	100.0	25.0	1.3
40	60	15	60	25	41	21.3	1.6	48.3	2.0	110.0	30.3	20.0	54.0	61.0	35.0	19.0	124.0	25.0	2.3
40	60	20	60	25	41	26.9	1.6	48.3	2.0	115.0	30.3	25.0	59.0	61.0	35.0	19.0	124.0	25.0	2.2
40	60	25	60	25	41	33.7	2.0	48.3	2.0	115.0	30.3	25.0	59.0	61.0	35.0	19.0	124.0	25.0	2.2
40	60	32	60	40	41	42.4	2.0	48.3	2.0	130.0	32.4	25.0	71.0	64.0	38.0	26.0	152.0	25.0	3.8
40	60	40	60	40	41	48.3	2.0	48.3	2.0	130.0	32.4	25.0	71.0	64.0	38.0	26.0	152.0	25.0	3.7
50	60	8	60	10	41	13.5	1.6	60.3	2.0	115.0	34.5	20.0	48.5	70.0	37.8	12.5	110.0	30.0	1.8
50	60	10	60	10	41	17.2	1.6	60.3	2.0	115.0	34.5	20.0	48.5	70.0	37.8	12.5	110.0	30.0	1.8
50	60	15	60	10	41	21.3	1.6	60.3	2.0	115.0	34.5	20.0	48.5	70.0	37.8	12.5	110.0	30.0	1.8
50	60	15	60	25	41	21.3	1.6	60.3	2.0	123.0	36.9	20.0	54.0	73.0	41.0	19.0	134.0	30.0	3.0
50	60	20	60	25	41	26.9	1.6	60.3	2.0	128.0	36.9	25.0	59.0	73.0	41.0	19.0	134.0	30.0	2.9
50	60	25	60	25	41	33.7	2.0	60.3	2.0	128.0	36.9	25.0	59.0	73.0	41.0	19.0	134.0	30.0	2.9
50	60	32	60	40	41	42.4	2.0	60.3	2.0	142.0	39.1	25.0	71.0	76.0	44.0	26.0	162.0	30.0	4.8

Other combinations on request
[1] see Butt weld spigots table on page 7, [2] MG = diaphragm size, [3] WKZ = valve body material code, [4] G = valve body weight.
* Attention: The external geometry does not correspond to the drawing shown.
Note: Dimensions for code 1B (DIN 11864 series B) correspond to code 60.

Continued on the next page

Dimensions																			
DN 2	Code 2[1]	DN 1	Code 1[1]	MG[2]	WKZ[3]	D1 (mm)	S1 (mm)	D2 (mm)	S2 (mm)	L (mm)	L1 (mm)	L2 (mm)	L3 (mm)	H (mm)	H1 (mm)	H2 (mm)	B (mm)	B1 (mm)	G[4] (kg)
50	60	40	60	40	41	48.3	2.0	60.3	2.0	142.0	39.1	25.0	71.0	76.0	44.0	26.0	162.0	30.0	4.7
50	60	50	60	50	41	60.3	2.0	60.3	2.0	158.0	38.7	30.0	86.5	79.0	46.0	32.0	184.0	30.0	6.3
65	60	8	60	10	41	13.5	1.6	76.1	2.0	132.0	43.3	20.0	48.5	86.0	45.7	12.5	110.0	30.0	2.4
65	60	10	60	10	41	17.2	1.6	76.1	2.0	132.0	43.3	20.0	48.5	86.0	45.7	12.5	110.0	30.0	2.4
65	60	15	60	10	41	21.3	1.6	76.1	2.0	132.0	43.3	20.0	48.5	86.0	45.7	12.5	110.0	30.0	2.4
65	60	15	60	25	41	21.3	1.6	76.1	2.0	140.0	45.7	20.0	54.0	89.0	48.9	19.0	134.0	30.0	4.0
65	60	20	60	25	41	26.9	1.6	76.1	2.0	145.0	45.7	25.0	59.0	89.0	48.9	19.0	134.0	30.0	3.9
65	60	25	60	25	41	33.7	2.0	76.1	2.0	145.0	45.7	25.0	59.0	89.0	48.9	19.0	134.0	30.0	3.9
65	60	32	60	40	41	42.4	2.0	76.1	2.0	159.0	47.8	25.0	71.0	92.0	51.9	26.0	162.0	30.0	6.4
65	60	40	60	40	41	48.3	2.0	76.1	2.0	159.0	47.8	25.0	71.0	92.0	51.9	26.0	162.0	30.0	6.3
65	60	50	60	50	41	60.3	2.0	76.1	2.0	175.0	47.5	30.0	86.5	94.0	53.9	32.0	184.0	30.0	8.2
65	60	65	60	80	41	76.1	2.0	76.1	2.0	201.0	50.4	30.0	110.0	103.0	61.8	62.0	250.0	30.0	16.7
80	60	8	60	25	41	13.5	1.6	88.9	2.3	153.0	52.5	20.0	54.0	102.0	55.3	19.0	134.0	30.0	4.9
80	60	10	60	25	41	17.2	1.6	88.9	2.3	153.0	52.5	20.0	54.0	102.0	55.3	19.0	134.0	30.0	4.9
80	60	15	60	25	41	21.3	1.6	88.9	2.3	153.0	52.5	20.0	54.0	102.0	55.3	19.0	134.0	30.0	4.9
80	60	20	60	25	41	26.9	1.6	88.9	2.3	158.0	52.5	25.0	59.0	102.0	55.3	19.0	134.0	30.0	4.8
80	60	25	60	25	41	33.7	2.0	88.9	2.3	158.0	52.5	25.0	59.0	102.0	55.3	19.0	134.0	30.0	4.8
80	60	32	60	40	41	42.4	2.0	88.9	2.3	172.0	54.6	25.0	71.0	105.0	58.3	26.0	162.0	30.0	7.8
80	60	40	60	40	41	48.3	2.0	88.9	2.3	172.0	54.6	25.0	71.0	105.0	58.3	26.0	162.0	30.0	7.7
80	60	50	60	50	41	60.3	2.0	88.9	2.3	188.0	54.3	30.0	86.5	107.0	60.3	32.0	184.0	30.0	10.1
80	60	65	60	80	41	76.1	2.0	88.9	2.3	214.0	57.2	30.0	110.0	115.0	68.2	62.0	250.0	30.0	19.9
80	60	80	60	80	41	88.9	2.3	88.9	2.3	214.0	57.2	30.0	110.0	115.0	68.2	62.0	250.0	30.0	18.9
100	60	8	60	25	41	13.5	1.6	114.3	2.3	180.0	66.6	20.0	54.0	127.0	68.0	19.0	134.0	30.0	6.7
100	60	10	60	25	41	17.2	1.6	114.3	2.3	180.0	66.6	20.0	54.0	127.0	68.0	19.0	134.0	30.0	6.7
100	60	15	60	25	41	21.3	1.6	114.3	2.3	180.0	66.6	20.0	54.0	127.0	68.0	19.0	134.0	30.0	6.7
100	60	20	60	25	41	26.9	1.6	114.3	2.3	185.0	66.6	25.0	59.0	127.0	68.0	19.0	134.0	30.0	6.6
100	60	25	60	25	41	33.7	2.0	114.3	2.3	185.0	66.6	25.0	59.0	127.0	68.0	19.0	134.0	30.0	6.6
100	60	32	60	40	41	42.4	2.0	114.3	2.3	199.0	68.7	25.0	71.0	130.0	71.0	26.0	162.0	30.0	10.6
100	60	40	60	40	41	48.3	2.0	114.3	2.3	199.0	68.7	25.0	71.0	130.0	71.0	26.0	162.0	30.0	10.4
100	60	50	60	50	41	60.3	2.0	114.3	2.3	215.0	68.4	30.0	86.5	133.0	73.0	32.0	184.0	30.0	14.0
100	60	65	60	80	41	76.1	2.0	114.3	2.3	241.0	71.3	30.0	110.0	140.0	80.9	62.0	250.0	30.0	26.8
100	60	80	60	80	41	88.9	2.3	114.3	2.3	241.0	71.3	30.0	110.0	140.0	80.9	62.0	250.0	30.0	25.9
100	60	100	60	100	41	114.3	2.3	114.3	2.3	279.0	73.1	30.0	146.0	135.0	75.2	75.2	292.0	30.0	33.1
125	60	32	60	40	41	42.4	2.0	139.7	2.6	225.0	82.5	25.0	71.0	156.0	83.7	26.0	162.0	30.0	13.8
125	60	40	60	40	41	48.3	2.0	139.7	2.6	225.0	82.5	25.0	71.0	156.0	83.7	26.0	162.0	30.0	13.7
125	60	50	60	50	41	60.3	2.0	139.7	2.6	241.0	82.2	30.0	86.5	158.0	85.7	32.0	184.0	30.0	18.0
125	60	65	60	80	41	76.1	2.0	139.7	2.6	267.0	85.1	30.0	110.0	166.0	93.6	62.0	250.0	30.0	34.6
125	60	80	60	80	41	88.9	2.3	139.7	2.6	267.0	85.1	30.0	110.0	166.0	93.6	62.0	250.0	30.0	33.7
125	60	100	60	100	41	114.3	2.3	139.7	2.6	305.0	86.9	30.0	146.0	160.0	87.9	75.2	292.0	30.0	43.7
150	60	32	60	40	41	42.4	2.0	168.3	2.6	256.0	98.4	25.0	71.0	184.0	98.0	26.0	162.0	30.0	17.7
150	60	40	60	40	41	48.3	2.0	168.3	2.6	256.0	98.4	25.0	71.0	184.0	98.0	26.0	162.0	30.0	17.6
150	60	50	60	50	41	60.3	2.0	168.3	2.6	271.0	98.1	30.0	86.5	187.0	100.0	32.0	184.0	30.0	23.2
150	60	65	60	80	41	76.1	2.0	168.3	2.6	298.0	101.0	30.0	110.0	194.0	107.9	62.0	250.0	30.0	43.8
150	60	80	60	80	41	88.9	2.3	168.3	2.6	298.0	101.0	30.0	110.0	194.0	107.9	62.0	250.0	30.0	42.9
150	60	100	60	100	41	114.3	2.3	168.3	2.6	335.0	102.8	30.0	146.0	189.0	102.2	75.2	292.0	30.0	56.7

Other combinations on request

[1] see Butt weld spigots table on page 7, [2] MG = diaphragm size, [3] WKZ = valve body material code, [4] G = valve body weight.

* Attention: The external geometry does not correspond to the drawing shown.

Note: Dimensions for code 1B (DIN 11864 series B) correspond to code 60.

T valve bodies

for DIN pipes, DN 6 - DN 150

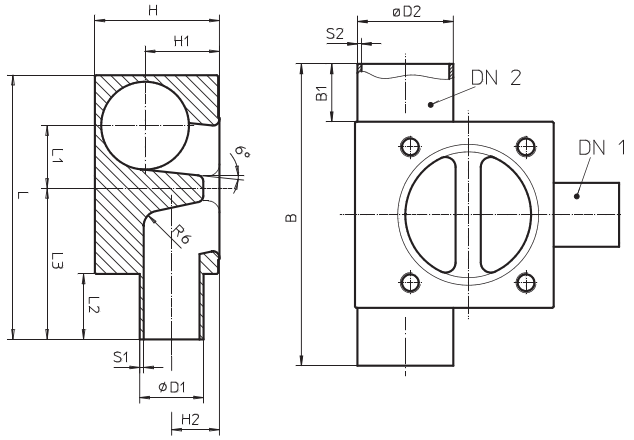

Valve body material	Code
1.4435 (BN2) Fe<0,5%	32
1.4435 (ASTM A 351 CF3M)*	34
1.4435 (316L/F316L)	41
1.4435 (BN2) Fe<0,5%	43

* Material equivalency 316 L
Special materials on request

The valve body dimensions for your order are clearly defined by specification of the codes in the fields with a coloured background in the given sequence.

Note:
Dimensions code 32 = dimensions code 34
Dimensions code 41 = dimensions code 43

Dimensions																			
DN 2	Code 2[1]	DN 1	Code 1[1]	MG[2]	WKZ[3]	D1 (mm)	S1 (mm)	D2 (mm)	S2 (mm)	L (mm)	L1 (mm)	L2 (mm)	L3 (mm)	H (mm)	H1 (mm)	H2 (mm)	B (mm)	B1 (mm)	G[4] (kg)
6	0	4	0	8	41	6.0	1.0	8.0	1.0	42.5	7.9	10.0	26.5	15.0	9.3	8.5	72.0	20.0	0.1
6	0	6	0	8	41	8.0	1.0	8.0	1.0	52.5	7.9	20.0	36.5	15.0	9.3	8.5	72.0	20.0	0.1
8	0	4	0	8	41	6.0	1.0	10.0	1.0	42.5	8.0	10.0	26.5	17.0	10.3	8.5	72.0	20.0	0.1
8	0	6	0	8	41	8.0	1.0	10.0	1.0	52.5	8.0	20.0	36.5	17.0	10.3	8.5	72.0	20.0	0.1
8	0	8	0	8	41	10.0	1.0	10.0	1.0	52.5	8.0	20.0	36.5	17.0	10.3	8.5	72.0	20.0	0.1
10	16	4	0	8	41	6.0	1.0	12.0	1.0	42.5	8.0	10.0	26.5	19.0	11.3	8.5	72.0	20.0	0.1
10	17	4	0	8	41	6.0	1.0	13.0	1.5	43.0	8.0	10.0	26.5	20.0	11.8	8.5	72.0	20.0	0.2
10	16	6	0	8	41	8.0	1.0	12.0	1.0	52.5	8.0	20.0	36.5	19.0	11.3	8.5	72.0	20.0	0.1
10	17	6	0	8	41	8.0	1.0	13.0	1.5	53.0	8.0	20.0	36.5	20.0	11.8	8.5	72.0	20.0	0.2
10	17	8	0	8	41	10.0	1.0	13.0	1.5	53.0	8.0	20.0	36.5	20.0	11.8	8.5	72.0	20.0	0.2
10	16	8	0	8	41	10.0	1.0	12.0	1.0	52.5	8.0	20.0	36.5	19.0	11.3	8.5	72.0	20.0	0.1
10	16	10	16	8	41	12.0	1.0	12.0	1.0	52.5	8.0	20.0	36.5	19.0	11.3	8.5	72.0	20.0	0.1
10	17	10	17	8	41	13.0	1.5	13.0	1.5	53.0	8.0	20.0	36.5	20.0	11.8	8.5	72.0	20.0	0.2
10	16	10	16	8	34*	12.0	1.0	12.0	1.0	52.0	8.5	20.0	36.0	21.0	14.0	8.5	72.0	20.0	0.2
10	17	10	17	8	34*	13.0	1.5	13.0	1.5	52.0	8.5	20.0	36.0	21.0	14.0	8.5	72.0	20.0	0.2
15	17	4	0	8	41	6.0	1.0	19.0	1.5	49.0	11.4	10.0	26.5	26.0	14.8	8.5	72.0	20.0	0.2
15	17	6	0	8	41	8.0	1.0	19.0	1.5	59.0	11.4	20.0	36.5	26.0	14.8	8.5	72.0	20.0	0.2
15	17	8	0	8	41	10.0	1.0	19.0	1.5	59.0	11.4	20.0	36.5	26.0	14.8	8.5	72.0	20.0	0.2
15	17	10	17	8	41	13.0	1.5	19.0	1.5	59.0	11.4	20.0	36.5	26.0	14.8	8.5	72.0	20.0	0.2
15	16	10	16	8	41	12.0	1.0	18.0	1.0	59.0	11.3	20.0	36.5	25.0	14.3	8.5	72.0	20.0	0.2
15	17	10	16	8	41	12.0	1.0	19.0	1.5	59.0	11.4	20.0	36.5	26.0	14.8	8.5	72.0	20.0	0.2
15	17	15	17	10	41	19.0	1.5	19.0	1.5	76.0	12.1	20.0	48.5	29.0	17.1	12.5	90.0	20.0	0.5
15	17	15	17	25	41	19.0	1.5	19.0	1.5	88.0	21.1	20.0	54.0	32.0	20.3	19.0	114.0	20.0	1.0
20	17	4	0	8	41	6.0	1.0	23.0	1.5	54.0	13.6	10.0	26.5	30.0	16.8	8.5	82.0	25.0	0.3

Other combinations on request
[1] see Butt weld spigots table on page 7. [2] MG = diaphragm size. [3] WKZ = valve body material code. [4] G = valve body weight.
* Attention: The external geometry does not correspond to the drawing shown.

Continued on the next page

Dimensions																			
DN 2	Code 2[1]	DN 1	Code 1[1]	MG[2]	WKZ[3]	D1 (mm)	S1 (mm)	D2 (mm)	S2 (mm)	L (mm)	L1 (mm)	L2 (mm)	L3 (mm)	H (mm)	H1 (mm)	H2 (mm)	B (mm)	B1 (mm)	G[4] (kg)
20	17	6	0	8	41	8.0	1.0	23.0	1.5	64.0	13.6	20.0	36.5	30.0	16.8	8.5	82.0	25.0	0.3
20	17	8	0	8	41	10.0	1.0	23.0	1.5	64.0	13.6	20.0	36.5	30.0	16.8	8.5	82.0	25.0	0.3
20	17	10	16	8	41	12.0	1.0	23.0	1.5	64.0	13.6	20.0	36.5	30.0	16.8	8.5	82.0	25.0	0.3
20	17	10	17	8	41	13.0	1.5	23.0	1.5	64.0	13.6	20.0	36.5	30.0	16.8	8.5	82.0	25.0	0.3
20	17	15	17	10	41	19.0	1.5	23.0	1.5	76.0	14.3	20.0	48.5	33.0	19.1	12.5	100.0	25.0	0.6
20	17	15	17	25	41	19.0	1.5	23.0	1.5	89.0	21.3	20.0	54.0	36.0	22.3	19.0	124.0	25.0	1.2
20	17	20	17	25	41	23.0	1.5	23.0	1.5	94.0	21.3	25.0	59.0	36.0	22.3	19.0	124.0	25.0	1.1
25	17	4	0	8	41	6.0	1.0	29.0	1.5	60.0	16.9	10.0	26.5	36.0	19.8	8.5	82.0	25.0	0.4
25	17	6	0	8	41	8.0	1.0	29.0	1.5	70.0	16.9	20.0	36.5	36.0	19.8	8.5	82.0	25.0	0.4
25	17	8	0	8	41	10.0	1.0	29.0	1.5	70.0	16.9	20.0	36.5	36.0	19.8	8.5	82.0	25.0	0.4
25	17	10	16	8	41	12.0	1.0	29.0	1.5	70.0	16.9	20.0	36.5	36.0	19.8	8.5	82.0	25.0	0.4
25	17	10	17	8	41	13.0	1.5	29.0	1.5	70.0	16.9	20.0	36.5	36.0	19.8	8.5	82.0	25.0	0.4
25	17	15	17	10	41	19.0	1.5	29.0	1.5	83.0	17.6	20.0	48.5	39.0	22.1	12.5	100.0	25.0	0.8
25	17	15	17	25	41	19.0	1.5	29.0	1.5	91.0	20.1	20.0	54.0	42.0	25.3	19.0	124.0	25.0	1.3
25	17	20	17	25	41	23.0	1.5	29.0	1.5	96.0	20.1	25.0	59.0	42.0	25.3	19.0	124.0	25.0	1.3
25	17	25	17	25	41	29.0	1.5	29.0	1.5	96.0	20.1	25.0	59.0	42.0	25.3	19.0	124.0	25.0	1.3
32	17	4	0	10	41	6.0	1.0	35.0	1.5	79.0	20.9	10.0	38.5	45.0	25.1	12.5	100.0	25.0	1.0
32	17	6	0	10	41	8.0	1.0	35.0	1.5	89.0	20.9	20.0	48.5	45.0	25.1	12.5	100.0	25.0	1.0
32	17	8	0	10	41	10.0	1.0	35.0	1.5	89.0	20.9	20.0	48.5	45.0	25.1	12.5	100.0	25.0	1.0
32	17	10	17	10	41	13.0	1.5	35.0	1.5	89.0	20.9	20.0	48.5	45.0	25.1	12.5	100.0	25.0	1.0
32	17	10	16	10	41	12.0	1.0	35.0	1.5	89.0	20.9	20.0	48.5	45.0	25.1	12.5	100.0	25.0	1.0
32	17	15	17	10	41	19.0	1.5	35.0	1.5	89.0	20.9	20.0	48.5	45.0	25.1	12.5	100.0	25.0	0.9
32	17	15	17	25	41	19.0	1.5	35.0	1.5	97.0	23.4	20.0	54.0	48.0	28.3	19.0	124.0	25.0	1.6
32	17	20	17	25	41	23.0	1.5	35.0	1.5	102.0	23.4	25.0	59.0	48.0	28.3	19.0	124.0	25.0	1.6
32	17	25	17	25	41	29.0	1.5	35.0	1.5	102.0	23.4	25.0	59.0	48.0	28.3	19.0	124.0	25.0	1.5
32	17	32	17	40	41	35.0	1.5	35.0	1.5	117.0	25.5	25.0	71.0	51.0	31.3	26.0	152.0	25.0	2.8
40	17	4	0	10	41	6.0	1.0	41.0	1.5	85.0	24.3	10.0	38.5	51.0	28.1	12.5	100.0	25.0	1.1
40	17	6	0	10	41	8.0	1.0	41.0	1.5	95.0	24.3	20.0	48.5	51.0	28.1	12.5	100.0	25.0	1.1
40	17	8	0	10	41	10.0	1.0	41.0	1.5	95.0	24.3	20.0	48.5	51.0	28.1	12.5	100.0	25.0	1.1
40	17	10	17	10	41	13.0	1.5	41.0	1.5	95.0	24.3	20.0	48.5	51.0	28.1	12.5	100.0	25.0	1.1
40	17	10	16	10	41	12.0	1.0	41.0	1.5	95.0	24.3	20.0	48.5	51.0	28.1	12.5	100.0	25.0	1.1
40	17	15	17	10	41	19.0	1.5	41.0	1.5	95.0	24.3	20.0	48.5	51.0	28.1	12.5	100.0	25.0	1.1
40	17	15	17	25	41	19.0	1.5	41.0	1.5	103.0	26.7	20.0	54.0	54.0	31.3	19.0	124.0	25.0	1.9
40	17	20	17	25	41	23.0	1.5	41.0	1.5	108.0	26.7	25.0	59.0	54.0	31.3	19.0	124.0	25.0	1.9
40	17	25	17	25	41	29.0	1.5	41.0	1.5	108.0	26.7	25.0	59.0	54.0	31.3	19.0	124.0	25.0	1.8
40	17	32	17	40	41	35.0	1.5	41.0	1.5	122.0	28.8	25.0	71.0	57.0	34.3	26.0	152.0	25.0	3.2
40	17	40	17	40	41	41.0	1.5	41.0	1.5	122.0	28.8	25.0	71.0	57.0	34.3	26.0	152.0	25.0	3.1
50	17	4	0	10	41	6.0	1.0	53.0	1.5	98.0	30.9	10.0	38.5	63.0	34.1	12.5	110.0	30.0	1.5
50	17	6	0	10	41	8.0	1.0	53.0	1.5	108.0	30.9	20.0	48.5	63.0	34.1	12.5	110.0	30.0	1.5
50	17	8	0	10	41	10.0	1.0	53.0	1.5	108.0	30.9	20.0	48.5	63.0	34.1	12.5	110.0	30.0	1.5
50	17	10	17	10	41	13.0	1.5	53.0	1.5	108.0	30.9	20.0	48.5	63.0	34.1	12.5	110.0	30.0	1.5
50	17	10	16	10	41	12.0	1.0	53.0	1.5	108.0	30.9	20.0	48.5	63.0	34.1	12.5	110.0	30.0	1.5
50	17	15	17	10	41	19.0	1.5	53.0	1.5	108.0	30.9	20.0	48.5	63.0	34.1	12.5	110.0	30.0	1.5
50	17	15	17	25	41	19.0	1.5	53.0	1.5	116.0	33.4	20.0	54.0	66.0	37.3	19.0	134.0	30.0	2.6
50	17	20	17	25	41	23.0	1.5	53.0	1.5	121.0	33.4	25.0	59.0	66.0	37.3	19.0	134.0	30.0	2.5
50	17	25	17	25	41	29.0	1.5	53.0	1.5	121.0	33.4	25.0	59.0	66.0	37.3	19.0	134.0	30.0	2.5

Other combinations on request

[1] see Butt weld spigots table on page 7. [2] MG = diaphragm size. [3] WKZ = valve body material code. [4] G = valve body weight.

* Attention: The external geometry does not correspond to the drawing shown.

Continued on the next page

T valve bodies

for DIN pipes, DN 6 - DN 150

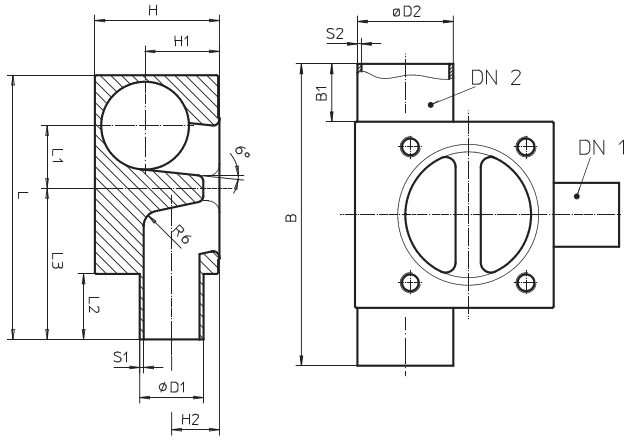

Valve body material	Code
1.4435 (BN2) Fe<0,5%	32
1.4435 (ASTM A 351 CF3M)*	34
1.4435 (316L/F316L)	41
1.4435 (BN2) Fe<0,5%	43

* Material equivalency 316 L
Special materials on request

The valve body dimensions for your order are clearly defined by specification of the codes in the fields with a coloured background in the given sequence.

Note:
Dimensions code 32 = dimensions code 34
Dimensions code 41 = dimensions code 43

Dimensions																			
DN 2	Code 2[1]	DN 1	Code 1[1]	MG[2]	WKZ[3]	D1 (mm)	S1 (mm)	D2 (mm)	S2 (mm)	L (mm)	L1 (mm)	L2 (mm)	L3 (mm)	H (mm)	H1 (mm)	H2 (mm)	B (mm)	B1 (mm)	G[4] (kg)
50	17	32	17	40	41	35.0	1.5	53.0	1.5	135.0	35.5	25.0	71.0	69.0	40.3	26.0	162.0	30.0	4.3
50	17	40	17	40	41	41.0	1.5	53.0	1.5	135.0	35.5	25.0	71.0	69.0	40.3	26.0	162.0	30.0	4.1
50	17	50	17	50	41	53.0	1.5	53.0	1.5	151.0	35.2	30.0	86.5	71.0	42.3	32.0	184.0	30.0	5.4
65	17	4	0	10	41	6.0	1.0	70.0	2.0	115.0	39.9	10.0	38.5	80.0	42.6	12.5	110.0	30.0	2.2
65	17	6	0	10	41	8.0	1.0	70.0	2.0	125.0	39.9	20.0	48.5	80.0	42.6	12.5	110.0	30.0	2.2
65	17	8	0	10	41	10.0	1.0	70.0	2.0	125.0	39.9	20.0	48.5	80.0	42.6	12.5	110.0	30.0	2.2
65	17	10	17	10	41	13.0	1.5	70.0	2.0	125.0	39.9	20.0	48.5	80.0	42.6	12.5	110.0	30.0	2.2
65	17	10	16	10	41	12.0	1.0	70.0	2.0	125.0	39.9	20.0	48.5	80.0	42.6	12.5	110.0	30.0	2.2
65	17	15	17	10	41	19.0	1.5	70.0	2.0	125.0	39.9	20.0	48.5	80.0	42.6	12.5	110.0	30.0	2.1
65	17	15	17	25	41	19.0	1.5	70.0	2.0	133.0	42.3	20.0	54.0	83.0	45.8	19.0	134.0	30.0	3.6
65	17	20	17	25	41	23.0	1.5	70.0	2.0	138.0	42.3	25.0	59.0	83.0	45.8	19.0	134.0	30.0	3.6
65	17	25	17	25	41	29.0	1.5	70.0	2.0	138.0	42.3	25.0	59.0	83.0	45.8	19.0	134.0	30.0	3.5
65	17	32	17	40	41	35.0	1.5	70.0	2.0	152.0	44.4	25.0	71.0	86.0	48.8	26.0	162.0	30.0	5.9
65	17	40	17	40	41	41.0	1.5	70.0	2.0	152.0	44.4	25.0	71.0	86.0	48.8	26.0	162.0	30.0	5.8
65	17	50	17	50	41	53.0	1.5	70.0	2.0	168.0	44.1	30.0	86.5	88.0	50.8	32.0	184.0	30.0	7.6
65	17	65	17	80	41	70.0	2.0	70.0	2.0	195.0	47.0	30.0	110.0	100.0	58.7	62.0	250.0	30.0	16.4
80	17	4	0	25	41	6.0	1.0	85.0	2.0	139.0	50.7	10.0	44.0	98.0	53.3	19.0	134.0	30.0	4.6
80	17	6	0	25	41	8.0	1.0	85.0	2.0	149.0	50.7	20.0	54.0	98.0	53.3	19.0	134.0	30.0	4.6
80	17	8	0	25	41	10.0	1.0	85.0	2.0	149.0	50.7	20.0	54.0	98.0	53.3	19.0	134.0	30.0	4.6
80	17	10	16	25	41	12.0	1.0	85.0	2.0	149.0	50.7	20.0	54.0	98.0	53.3	19.0	134.0	30.0	4.6
80	17	10	17	25	41	13.0	1.5	85.0	2.0	149.0	50.7	20.0	54.0	98.0	53.3	19.0	134.0	30.0	4.6
80	17	15	17	25	41	19.0	1.5	85.0	2.0	149.0	50.7	20.0	54.0	98.0	53.3	19.0	134.0	30.0	4.5
80	17	20	17	25	41	23.0	1.5	85.0	2.0	154.0	50.7	25.0	59.0	98.0	53.3	19.0	134.0	30.0	4.5
80	17	25	17	25	41	29.0	1.5	85.0	2.0	154.0	50.7	25.0	59.0	98.0	53.3	19.0	134.0	30.0	4.5

Other combinations on request
[1] see Butt weld spigots table on page 7. [2] MG = diaphragm size. [3] WKZ = valve body material code. [4] G = valve body weight.
* Attention: The external geometry does not correspond to the drawing shown.

Continued on the next page

Dimensions																			
DN 2	Code 2[1]	DN 1	Code 1[1]	MG[2]	WKZ[3]	D1 (mm)	S1 (mm)	D2 (mm)	S2 (mm)	L (mm)	L1 (mm)	L2 (mm)	L3 (mm)	H (mm)	H1 (mm)	H2 (mm)	B (mm)	B1 (mm)	G[4] (kg)
80	17	32	17	40	41	35.0	1.5	85.0	2.0	168.0	52.8	25.0	71.0	101.0	56.3	26.0	162.0	30.0	7.4
80	17	40	17	40	41	41.0	1.5	85.0	2.0	168.0	52.8	25.0	71.0	101.0	56.3	26.0	162.0	30.0	7.3
80	17	50	17	50	41	53.0	1.5	85.0	2.0	184.0	52.5	30.0	86.5	103.0	58.3	32.0	184.0	30.0	9.6
80	17	65	17	80	41	70.0	2.0	85.0	2.0	210.0	55.4	30.0	110.0	111.0	66.2	62.0	250.0	30.0	19.1
80	17	80	17	80	41	85.0	2.0	85.0	2.0	210.0	55.4	30.0	110.0	111.0	66.2	62.0	250.0	30.0	18.0
100	17	4	0	25	41	6.0	1.0	104.0	2.0	159.0	61.2	10.0	44.0	117.0	62.8	19.0	134.0	30.0	5.9
100	17	6	0	25	41	8.0	1.0	104.0	2.0	169.0	61.2	20.0	54.0	117.0	62.8	19.0	134.0	30.0	5.9
100	17	8	0	25	41	10.0	1.0	104.0	2.0	169.0	61.2	20.0	54.0	117.0	62.8	19.0	134.0	30.0	5.9
100	17	10	16	25	41	12.0	1.0	104.0	2.0	169.0	61.2	20.0	54.0	117.0	62.8	19.0	134.0	30.0	5.9
100	17	10	17	25	41	13.0	1.5	104.0	2.0	169.0	61.2	20.0	54.0	117.0	62.8	19.0	134.0	30.0	5.9
100	17	15	17	25	41	19.0	1.5	104.0	2.0	169.0	61.2	20.0	54.0	117.0	62.8	19.0	134.0	30.0	5.8
100	17	20	17	25	41	23.0	1.5	104.0	2.0	174.0	61.2	25.0	59.0	117.0	62.8	19.0	134.0	30.0	5.8
100	17	25	17	25	41	29.0	1.5	104.0	2.0	174.0	61.2	25.0	59.0	117.0	62.8	19.0	134.0	30.0	5.7
100	17	32	17	40	41	35.0	1.5	104.0	2.0	188.0	63.3	25.0	71.0	120.0	65.8	26.0	162.0	30.0	9.4
100	17	40	17	40	41	41.0	1.5	104.0	2.0	188.0	63.3	25.0	71.0	120.0	65.8	26.0	162.0	30.0	9.3
100	17	50	17	50	41	53.0	1.5	104.0	2.0	204.0	63.0	30.0	86.5	122.0	67.8	32.0	184.0	30.0	12.3
100	17	65	17	80	41	70.0	2.0	104.0	2.0	230.0	65.9	30.0	110.0	130.0	75.7	62.0	250.0	30.0	24.2
100	17	80	17	80	41	85.0	2.0	104.0	2.0	230.0	65.9	30.0	110.0	130.0	75.7	62.0	250.0	30.0	23.1
100	17	100	17	100	41	104.0	2.0	104.0	2.0	268.0	67.7	30.0	146.0	124.0	70.0	70.0	292.0	30.0	29.8
125	17	32	17	40	41	35.0	1.5	129.0	2.0	215.0	77.2	25.0	71.0	145.0	78.3	26.0	162.0	30.0	12.4
125	17	40	17	40	41	41.0	1.5	129.0	2.0	215.0	77.2	25.0	71.0	145.0	78.3	26.0	162.0	30.0	12.3
125	17	50	17	50	41	53.0	1.5	129.0	2.0	230.0	76.9	30.0	86.5	147.0	80.3	32.0	184.0	30.0	16.1
125	17	65	17	80	41	70.0	2.0	129.0	2.0	257.0	79.8	30.0	110.0	155.0	88.2	62.0	250.0	30.0	31.5
125	17	80	17	80	41	85.0	2.0	129.0	2.0	257.0	79.8	30.0	110.0	155.0	88.2	62.0	250.0	30.0	30.4
125	17	100	17	100	41	104.0	2.0	129.0	2.0	295.0	81.6	30.0	146.0	150.0	82.5	70.0	292.0	30.0	40.7
150	17	32	17	40	41	35.0	1.5	154.0	2.0	241.0	91.1	25.0	71.0	170.0	90.8	26.0	162.0	30.0	15.6
150	17	40	17	40	41	41.0	1.5	154.0	2.0	241.0	91.1	25.0	71.0	170.0	90.8	26.0	162.0	30.0	15.4
150	17	50	17	50	41	53.0	1.5	154.0	2.0	257.0	90.8	30.0	86.5	172.0	92.8	32.0	184.0	30.0	20.4
150	17	65	17	80	41	70.0	2.0	154.0	2.0	283.0	93.7	30.0	110.0	180.0	100.7	62.0	250.0	30.0	39.1
150	17	80	17	80	41	85.0	2.0	154.0	2.0	283.0	93.7	30.0	110.0	180.0	100.7	62.0	250.0	30.0	38.0
150	17	100	17	100	41	104.0	2.0	154.0	2.0	321.0	95.5	30.0	146.0	174.0	95.0	70.0	292.0	30.0	50.9

Other combinations on request

[1] see Butt weld spigots table on page 7. [2] MG = diaphragm size. [3] WKZ = valve body material code. [4] G = valve body weight.

* Attention: The external geometry does not correspond to the drawing shown.

T valve bodies

for ASME - BPE pipes, DN 8 - DN 150

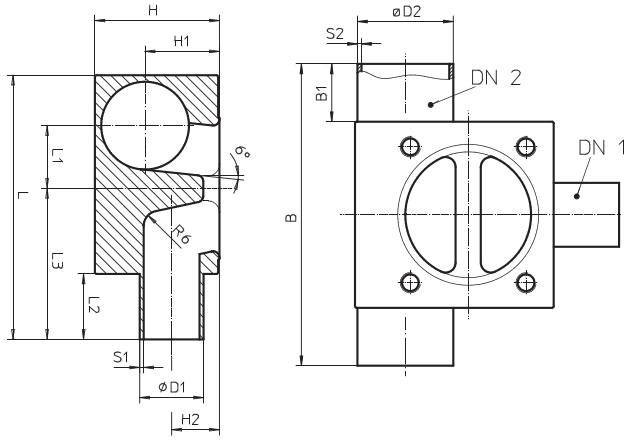

Valve body material	Code
1.4435 (BN2) Fe<0,5%	32
1.4435 (ASTM A 351 CF3M)*	34
1.4435 (316L/F316L)	41
1.4435 (BN2) Fe<0,5%	43

* Material equivalency 316 L
Special materials on request

The valve body dimensions for your order are clearly defined by specification of the codes in the fields with a coloured background in the given sequence.

Note:
Dimensions code 32 = dimensions code 34
Dimensions code 41 = dimensions code 43

Dimensions																			
DN 2	Code 2[1]	DN 1	Code 1[1]	MG[2]	WKZ[3]	D1 (mm)	S1 (mm)	D2 (mm)	S2 (mm)	L (mm)	L1 (mm)	L2 (mm)	L3 (mm)	H (mm)	H1 (mm)	H2 (mm)	B (mm)	B1 (mm)	G[4] (kg)
8	59	8	59	8	41	6.4	0.9	6.4	0.9	42.5	7.9	10.0	26.5	14.0	8.5	8.5	52.0	10.0	0.1
10	59	8	59	8	41	6.4	0.9	9.5	0.9	42.5	8.0	10.0	26.5	17.0	10.1	8.5	72.0	20.0	0.1
10	59	10	59	8	41	9.5	0.9	9.5	0.9	52.5	8.0	20.0	36.5	17.0	10.1	8.5	72.0	20.0	0.1
15	59	8	59	8	41	6.4	0.9	12.7	1.7	43.0	7.7	10.0	26.5	20.0	11.7	8.5	72.0	20.0	0.2
15	59	10	59	8	41	9.5	0.9	12.7	1.7	53.0	7.7	20.0	36.5	20.0	11.7	8.5	72.0	20.0	0.2
15	59	15	59	8	34*	12.7	1.7	12.7	1.7	52.0	8.5	20.0	36.0	21.0	14.0	8.5	72.0	20.0	0.2
15	59	15	59	8	41	12.7	1.7	12.7	1.7	53.0	7.7	20.0	36.5	20.0	11.7	8.5	72.0	20.0	0.2
20	59	8	59	8	41	6.4	0.9	19.1	1.7	49.0	11.2	10.0	26.5	26.0	14.8	8.5	82.0	25.0	0.2
20	59	10	59	8	41	9.5	0.9	19.1	1.7	59.0	11.2	20.0	36.5	26.0	14.8	8.5	82.0	25.0	0.2
20	59	15	59	8	41	12.7	1.7	19.1	1.7	59.0	11.2	20.0	36.5	26.0	14.8	8.5	82.0	25.0	0.2
20	59	20	59	10	41	19.1	1.7	19.1	1.7	81.0	11.9	25.0	53.5	29.0	17.1	12.5	100.0	25.0	0.6
25	59	8	59	8	41	6.4	0.9	25.4	1.7	56.0	14.8	10.0	26.5	33.0	18.0	8.5	82.0	25.0	0.3
25	59	10	59	8	41	9.5	0.9	25.4	1.7	66.0	14.8	20.0	36.5	33.0	18.0	8.5	82.0	25.0	0.3
25	59	15	59	8	41	12.7	1.7	25.4	1.7	66.0	14.8	20.0	36.5	33.0	18.0	8.5	82.0	25.0	0.3
25	59	20	59	10	41	19.1	1.7	25.4	1.7	84.0	15.5	25.0	53.5	35.0	20.3	12.5	100.0	25.0	0.7
25	59	20	59	25	41	19.1	1.7	25.4	1.7	93.0	17.9	25.0	59.0	38.0	23.5	19.0	124.0	25.0	1.2
25	59	25	59	25	41	25.4	1.7	25.4	1.7	93.0	17.9	25.0	59.0	38.0	23.5	19.0	124.0	25.0	1.2
40	59	8	59	10	41	6.4	0.9	38.1	1.7	82.0	22.5	10.0	38.5	48.0	26.7	12.5	100.0	25.0	1.1
40	59	10	59	10	41	9.5	0.9	38.1	1.7	92.0	22.5	20.0	48.5	48.0	26.7	12.5	100.0	25.0	1.1
40	59	15	59	10	41	12.7	1.7	38.1	1.7	92.0	22.5	20.0	48.5	48.0	26.7	12.5	100.0	25.0	1.1
40	59	20	59	10	41	19.1	1.7	38.1	1.7	97.0	22.5	25.0	53.5	48.0	26.7	12.5	100.0	25.0	1.0
40	59	20	59	25	41	19.1	1.7	38.1	1.7	105.0	25.0	25.0	59.0	51.0	29.9	19.0	124.0	25.0	1.8
40	59	25	59	25	41	25.4	1.7	38.1	1.7	105.0	25.0	25.0	59.0	51.0	29.9	19.0	124.0	25.0	1.7
40	59	40	59	40	41	38.1	1.7	38.1	1.7	119.0	27.1	25.0	71.0	54.0	32.9	26.0	152.0	25.0	2.9

Other combinations on request
[1] see Butt weld spigots table on page 7, [2] MG = diaphragm size, [3] WKZ = valve body material code, [4] G = valve body weight.
* Attention: The external geometry does not correspond to the drawing shown.

Dimensions																			
DN 2	Code 2[1]	DN 1	Code 1[1]	MG[2]	WKZ[3]	D1 (mm)	S1 (mm)	D2 (mm)	S2 (mm)	L (mm)	L1 (mm)	L2 (mm)	L3 (mm)	H (mm)	H1 (mm)	H2 (mm)	B (mm)	B1 (mm)	G[4] (kg)
50	59	8	59	10	41	6.4	0.9	50.8	1.7	95.0	29.6	10.0	38.5	60.0	33.0	12.5	110.0	30.0	1.4
50	59	10	59	10	41	9.5	0.9	50.8	1.7	105.0	29.6	20.0	48.5	60.0	33.0	12.5	110.0	30.0	1.4
50	59	15	59	10	41	12.7	1.7	50.8	1.7	105.0	29.6	20.0	48.5	60.0	33.0	12.5	110.0	30.0	1.4
50	59	20	59	10	41	19.1	1.7	50.8	1.7	110.0	29.6	25.0	53.5	60.0	33.0	12.5	110.0	30.0	1.4
50	59	20	59	25	41	19.1	1.7	50.8	1.7	118.0	32.0	25.0	59.0	64.0	36.2	19.0	134.0	30.0	2.5
50	59	25	59	25	41	25.4	1.7	50.8	1.7	118.0	32.0	25.0	59.0	64.0	36.2	19.0	134.0	30.0	2.4
50	59	40	59	40	41	38.1	1.7	50.8	1.7	133.0	34.1	25.0	71.0	67.0	39.2	26.0	162.0	30.0	4.1
50	59	50	59	50	41	50.8	1.7	50.8	1.7	148.0	33.8	30.0	86.5	69.0	41.2	32.0	184.0	30.0	5.3
65	59	8	59	10	41	6.4	0.9	63.5	1.7	109.0	36.6	10.0	38.5	73.0	39.4	12.5	110.0	30.0	1.9
65	59	10	59	10	41	9.5	0.9	63.5	1.7	119.0	36.6	20.0	48.5	73.0	39.4	12.5	110.0	30.0	1.9
65	59	15	59	10	41	12.7	1.7	63.5	1.7	119.0	36.6	20.0	48.5	73.0	39.4	12.5	110.0	30.0	1.9
65	59	20	59	10	41	19.1	1.7	63.5	1.7	124.0	36.6	25.0	53.5	73.0	39.4	12.5	110.0	30.0	1.9
65	59	20	59	25	41	19.1	1.7	63.5	1.7	132.0	39.1	25.0	59.0	76.0	42.6	19.0	134.0	30.0	3.1
65	59	25	59	25	41	25.4	1.7	63.5	1.7	132.0	39.1	25.0	59.0	76.0	42.6	19.0	134.0	30.0	3.1
65	59	40	59	40	41	38.1	1.7	63.5	1.7	146.0	41.2	25.0	71.0	79.0	45.6	26.0	162.0	30.0	5.1
65	59	50	59	50	41	50.8	1.7	63.5	1.7	162.0	40.9	30.0	86.5	82.0	47.6	32.0	184.0	30.0	6.9
65	59	65	59	80	41	63.5	1.7	63.5	1.7	190.0	43.8	30.0	110.0	96.0	55.5	62.0	250.0	30.0	15.8
80	59	8	59	25	41	6.4	0.9	76.2	1.7	130.0	46.1	10.0	44.0	89.0	48.9	19.0	134.0	30.0	3.9
80	59	10	59	25	41	9.5	0.9	76.2	1.7	140.0	46.1	20.0	54.0	89.0	48.9	19.0	134.0	30.0	3.9
80	59	15	59	25	41	12.7	1.7	76.2	1.7	140.0	46.1	20.0	54.0	89.0	48.9	19.0	134.0	30.0	3.9
80	59	20	59	25	41	19.1	1.7	76.2	1.7	145.0	46.1	25.0	59.0	89.0	48.9	19.0	134.0	30.0	3.9
80	59	25	59	25	41	25.4	1.7	76.2	1.7	145.0	46.1	25.0	59.0	89.0	48.9	19.0	134.0	30.0	3.8
80	59	40	59	40	41	38.1	1.7	76.2	1.7	159.0	48.2	25.0	71.0	92.0	51.9	26.0	162.0	30.0	6.3
80	59	50	59	50	41	50.8	1.7	76.2	1.7	175.0	47.9	30.0	86.5	94.0	53.9	32.0	184.0	30.0	8.4
80	59	65	59	80	41	63.5	1.7	76.2	1.7	201.0	50.8	30.0	110.0	102.0	61.8	62.0	250.0	30.0	17.0
80	59	80	59	80	41	76.2	1.7	76.2	1.7	201.0	50.8	30.0	110.0	103.0	61.8	62.0	250.0	30.0	16.4
100	59	8	59	25	41	6.4	0.9	101.6	2.1	157.0	59.8	10.0	44.0	114.0	61.6	19.0	134.0	30.0	5.7
100	59	10	59	25	41	9.5	0.9	101.6	2.1	167.0	59.8	20.0	54.0	114.0	61.6	19.0	134.0	30.0	5.7
100	59	15	59	25	41	12.7	1.7	101.6	2.1	167.0	59.8	20.0	54.0	114.0	61.6	19.0	134.0	30.0	5.7
100	59	20	59	25	41	19.1	1.7	101.6	2.1	172.0	59.8	25.0	59.0	114.0	61.6	19.0	134.0	30.0	5.7
100	59	25	59	25	41	25.4	1.7	101.6	2.1	172.0	59.8	25.0	59.0	114.0	61.6	19.0	134.0	30.0	5.6
100	59	40	59	40	41	38.1	1.7	101.6	2.1	186.0	61.9	25.0	71.0	117.0	64.6	26.0	162.0	30.0	9.1
100	59	50	59	50	41	50.8	1.7	101.6	2.1	201.0	61.6	30.0	86.5	120.0	66.6	32.0	184.0	30.0	12.1
100	59	65	59	80	41	63.5	1.7	101.6	2.1	228.0	64.5	30.0	110.0	128.0	74.5	62.0	250.0	30.0	24.2
100	59	80	59	80	41	76.2	1.7	101.6	2.1	228.0	64.5	30.0	110.0	128.0	74.5	62.0	250.0	30.0	23.3
100	59	100	59	100	41	101.6	2.1	101.6	2.1	266.0	66.3	30.0	146.0	122.0	68.8	68.8	292.0	30.0	29.6
150	59	40	59	40	41	38.1	1.7	152.4	2.8	239.0	89.4	25.0	71.0	168.0	90.0	26.0	162.0	30.0	15.6
150	59	50	59	50	41	50.8	1.7	152.4	2.8	254.0	89.1	30.0	86.5	171.0	92.0	32.0	184.0	30.0	20.6
150	59	65	59	80	41	63.5	1.7	152.4	2.8	281.0	92.0	30.0	110.0	179.0	99.9	62.0	250.0	30.0	39.8
150	59	80	59	80	41	76.2	1.7	152.4	2.8	281.0	92.0	30.0	110.0	179.0	99.9	62.0	250.0	30.0	39.0
150	59	100	59	100	41	101.6	2.1	152.4	2.8	319.0	93.8	30.0	146.0	173.0	94.2	68.8	292.0	30.0	51.6

Other combinations on request

[1] see Butt weld spigots table on page 7, [2] MG = diaphragm size, [3] WKZ = valve body material code, [4] G = valve body weight.

* Attention: The external geometry does not correspond to the drawing shown.

T valve bodies

for JIS-G3447 pipes, DN 25 - DN 100

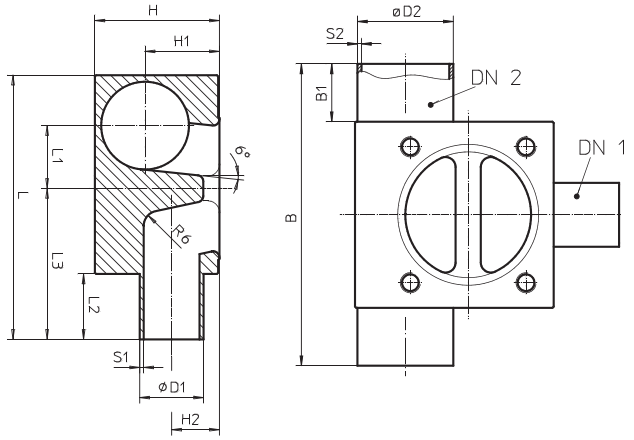

Valve body material	Code
1.4435 (316L/F316L)	41
1.4435 (BN2) Fe<0,5%	43

The valve body dimensions for your order are clearly defined by specification of the codes in the fields with a coloured background in the given sequence.

Note:
Dimensions code 41 = dimensions code 43

Dimensions																			
DN 2	Code 2[1]	DN 1	Code 1[1]	MG[2]	WKZ[3]	D1 (mm)	S1 (mm)	D2 (mm)	S2 (mm)	L (mm)	L1 (mm)	L2 (mm)	L3 (mm)	H (mm)	H1 (mm)	H2 (mm)	B (mm)	B1 (mm)	G[4] (kg)
25	35	25	35	25	41	25.4	1.2	25.4	1.2	93.0	18.4	25.0	59.0	38.0	23.5	19.0	124.0	25.0	1.1
32	35	25	35	25	41	25.4	1.2	31.8	1.2	99.0	21.9	25.0	59.0	45.0	26.7	19.0	124.0	25.0	1.4
32	35	32	35	40	41	31.8	1.2	31.8	1.2	117.0	24.0	25.0	71.0	48.0	29.7	26.0	152.0	25.0	2.7
40	35	25	35	25	41	25.4	1.2	38.1	1.2	105.0	25.4	25.0	59.0	51.0	29.9	19.0	124.0	25.0	1.7
40	35	32	35	40	41	31.8	1.2	38.1	1.2	120.0	27.5	25.0	71.0	54.0	32.9	26.0	152.0	25.0	3.0
40	35	40	35	40	41	38.1	1.2	38.1	1.2	120.0	27.5	25.0	71.0	54.0	32.9	26.0	152.0	25.0	2.9
50	35	25	35	25	41	25.4	1.2	50.8	1.5	119.0	32.2	25.0	59.0	64.0	36.2	19.0	134.0	30.0	2.4
50	35	32	35	40	41	31.8	1.2	50.8	1.5	133.0	34.3	25.0	71.0	67.0	39.2	26.0	162.0	30.0	4.1
50	35	40	35	40	41	38.1	1.2	50.8	1.5	133.0	34.3	25.0	71.0	67.0	39.2	26.0	162.0	30.0	4.0
50	35	50	35	50	41	50.8	1.5	50.8	1.5	148.0	34.0	30.0	86.5	69.0	41.2	32.0	184.0	30.0	5.2
65	35	25	35	25	41	25.4	1.2	63.5	2.0	131.0	38.7	25.0	59.0	76.0	42.6	19.0	134.0	30.0	3.1
65	35	32	35	40	41	31.8	1.2	63.5	2.0	146.0	40.8	25.0	71.0	79.0	45.6	26.0	162.0	30.0	5.3
65	35	40	35	40	41	38.1	1.2	63.5	2.0	146.0	40.8	25.0	71.0	79.0	45.6	26.0	162.0	30.0	5.2
65	35	50	35	50	41	50.8	1.5	63.5	2.0	161.0	40.5	30.0	86.5	82.0	47.6	32.0	184.0	30.0	6.9
65	35	65	35	80	41	63.5	2.0	63.5	2.0	190.0	43.4	30.0	110.0	96.0	55.5	62.0	250.0	30.0	16.0
80	35	25	35	25	41	25.4	1.2	76.3	2.0	145.0	45.8	25.0	59.0	89.0	49.0	19.0	134.0	30.0	3.9
80	35	32	35	40	41	31.8	1.2	76.3	2.0	159.0	47.9	25.0	71.0	92.0	52.0	26.0	162.0	30.0	6.5
80	35	40	35	40	41	38.1	1.2	76.3	2.0	159.0	47.9	25.0	71.0	92.0	52.0	26.0	162.0	30.0	6.4
80	35	50	35	50	41	50.8	1.5	76.3	2.0	175.0	47.6	30.0	86.5	95.0	54.0	32.0	184.0	30.0	8.6
80	35	65	35	80	41	63.5	2.0	76.3	2.0	201.0	50.5	30.0	110.0	102.0	61.9	62.0	250.0	30.0	17.2
80	35	80	35	80	41	76.3	2.0	76.3	2.0	201.0	50.5	30.0	110.0	103.0	61.9	62.0	250.0	30.0	16.6
100	35	25	35	25	41	25.4	1.2	101.6	2.0	172.0	59.9	25.0	59.0	114.0	61.6	19.0	134.0	30.0	5.6
100	35	32	35	40	41	31.8	1.2	101.6	2.0	186.0	62.0	25.0	71.0	117.0	64.6	26.0	162.0	30.0	9.2
100	35	40	35	40	41	38.1	1.2	101.6	2.0	186.0	62.0	25.0	71.0	117.0	64.6	26.0	162.0	30.0	9.0
100	35	50	35	50	41	50.8	1.5	101.6	2.0	201.0	61.7	30.0	86.5	120.0	66.6	32.0	184.0	30.0	12.0
100	35	65	35	80	41	63.5	2.0	101.6	2.0	228.0	64.6	30.0	110.0	128.0	74.5	62.0	250.0	30.0	24.2
100	35	80	35	80	41	76.3	2.0	101.6	2.0	228.0	64.6	30.0	110.0	128.0	74.5	62.0	250.0	30.0	23.3
100	35	100	35	100	41	101.6	2.0	101.6	2.0	266.0	66.4	30.0	146.0	122.0	68.8	68.8	292.0	30.0	29.5

Other combinations on request

[1] see Butt weld spigots table on page 7, [2] MG = diaphragm size, [3] WKZ = valve body material code, [4] G = valve body weight.

T valve bodies

for JIS-G3459 pipes, DN 6 - DN 100

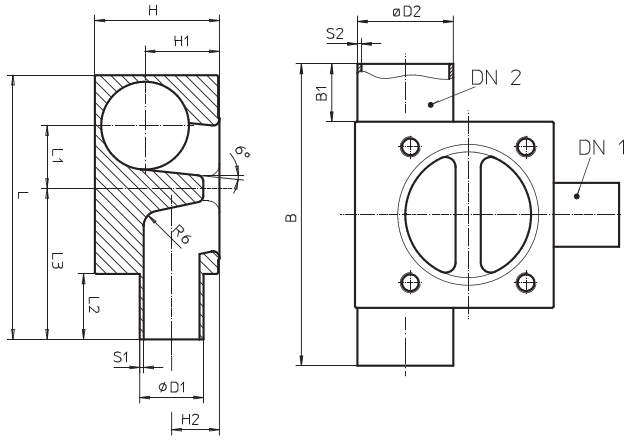

Valve body material	Code
1.4435 (316L/F316L)	41
1.4435 (BN2) Fe<0,5%	43

The valve body dimensions for your order are clearly defined by specification of the codes in the fields with a coloured background in the given sequence.

Note:
Dimensions code 41 = dimensions code 43

Dimensions																			
DN 2	Code 2[1]	DN 1	Code 11	MG[2]	WKZ[3]	D1 (mm)	S1 (mm)	D2 (mm)	S2 (mm)	L (mm)	L1 (mm)	L2 (mm)	L3 (mm)	H (mm)	H1 (mm)	H2 (mm)	B (mm)	B1 (mm)	G[4] (kg)
6	36	6	36	8	41	10.5	1.2	10.5	1.2	52.5	8.1	20.0	36.5	18.0	10.6	8.5	72.0	20.0	0.1
8	36	6	36	8	41	10.5	1.2	13.8	1.7	54.0	8.3	20.0	36.5	21.0	12.2	8.5	72.0	20.0	0.2
8	36	8	36	8	41	13.8	1.7	13.8	1.7	54.0	8.3	20.0	36.5	21.0	12.2	8.5	72.0	20.0	0.2
10	36	6	36	8	41	10.5	1.2	17.3	1.7	57.0	10.3	20.0	36.5	25.0	14.0	8.5	72.0	20.0	0.2
10	36	8	36	8	41	13.8	1.7	17.3	1.7	57.0	10.3	20.0	36.5	25.0	14.0	8.5	72.0	20.0	0.2
10	36	10	36	10	41	17.3	1.7	17.3	1.7	76.0	11.0	20.0	48.5	27.0	16.3	12.5	90.0	20.0	0.5
15	36	6	36	8	41	10.5	1.2	21.7	2.1	62.0	12.3	20.0	36.5	29.0	16.2	8.5	72.0	20.0	0.3
15	36	8	36	8	41	13.8	1.7	21.7	2.1	62.0	12.3	20.0	36.5	29.0	16.2	8.5	72.0	20.0	0.3
15	36	10	36	10	41	17.3	1.7	21.7	2.1	76.0	12.9	20.0	48.5	31.0	18.5	12.5	90.0	20.0	0.6
15	36	15	36	10	41	21.7	2.1	21.7	2.1	76.0	12.9	20.0	48.5	31.0	18.5	12.5	90.0	20.0	0.6
20	36	6	36	8	41	10.5	1.2	27.2	2.1	67.0	15.3	20.0	36.5	34.0	18.9	8.5	82.0	25.0	0.4
20	36	8	36	8	41	13.8	1.7	27.2	2.1	67.0	15.3	20.0	36.5	34.0	18.9	8.5	82.0	25.0	0.4
20	36	10	36	10	41	17.3	1.7	27.2	2.1	80.0	16.0	20.0	48.5	37.0	21.2	12.5	100.0	25.0	0.7
20	36	15	36	10	41	21.7	2.1	27.2	2.1	80.0	16.0	20.0	48.5	37.0	21.2	12.5	100.0	25.0	0.7
20	36	20	36	25	41	27.2	2.1	27.2	2.1	93.0	18.5	25.0	59.0	40.0	24.4	19.0	124.0	25.0	1.2
25	36	6	36	8	41	10.5	1.2	34.0	2.8	74.0	18.4	20.0	36.5	41.0	22.3	8.5	82.0	25.0	0.5
25	36	8	36	8	41	13.8	1.7	34.0	2.8	74.0	18.4	20.0	36.5	41.0	22.3	8.5	82.0	25.0	0.5
25	36	10	36	10	41	17.3	1.7	34.0	2.8	87.0	19.1	20.0	48.5	44.0	24.6	12.5	100.0	25.0	1.0
25	36	15	36	10	41	21.7	2.1	34.0	2.8	87.0	19.1	20.0	48.5	44.0	24.6	12.5	100.0	25.0	1.0
25	36	20	36	25	41	27.2	2.1	34.0	2.8	100.0	21.5	25.0	59.0	47.0	27.8	19.0	124.0	25.0	1.6
25	36	25	36	25	41	34.0	2.8	34.0	2.8	100.0	21.5	25.0	59.0	47.0	27.8	19.0	124.0	25.0	1.6
32	36	6	36	10	41	10.5	1.2	42.7	2.8	96.0	23.9	20.0	48.5	52.0	29.0	12.5	100.0	25.0	1.3
32	36	8	36	10	41	13.8	1.7	42.7	2.8	96.0	23.9	20.0	48.5	52.0	29.0	12.5	100.0	25.0	1.3
32	36	10	36	10	41	17.3	1.7	42.7	2.8	96.0	23.9	20.0	48.5	52.0	29.0	12.5	100.0	25.0	1.2
32	36	15	36	10	41	21.7	2.1	42.7	2.8	96.0	23.9	20.0	48.5	52.0	29.0	12.5	100.0	25.0	1.2
32	36	20	36	25	41	27.2	2.1	42.7	2.8	109.0	26.4	25.0	59.0	56.0	32.2	19.0	124.0	25.0	2.1
32	36	25	36	25	41	34.0	2.8	42.7	2.8	109.0	26.4	25.0	59.0	56.0	32.2	19.0	124.0	25.0	2.1
32	36	32	36	40	41	42.7	2.8	42.7	2.8	123.0	28.5	25.0	71.0	59.0	35.2	26.0	152.0	25.0	3.5

Other combinations on request

[1] see Butt weld spigots table on page 7, [2] MG = diaphragm size, [3] WKZ = valve body material code, [4] G = valve body weight.

Continued on the next page

T valve bodies

for JIS-G3459 pipes, DN 6 - DN 100

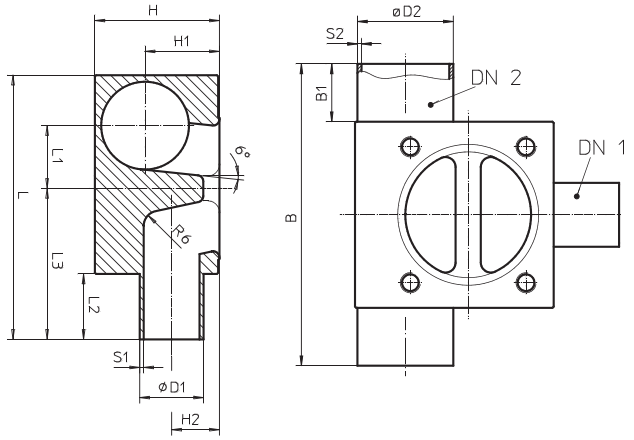

Valve body material	Code
1.4435 (316L/F316L)	41
1.4435 (BN2) Fe<0,5%	43

The valve body dimensions for your order are clearly defined by specification of the codes in the fields with a coloured background in the given sequence.

Note:
Dimensions code 41 = dimensions code 43

Dimensions																			
DN 2	Code 2[1]	DN 1	Code 11	MG [2]	WKZ [3]	D1 (mm)	S1 (mm)	D2 (mm)	S2 (mm)	L (mm)	L1 (mm)	L2 (mm)	L3 (mm)	H (mm)	H1 (mm)	H2 (mm)	B (mm)	B1 (mm)	G [4] (kg)
40	36	6	36	10	41	10.5	1.2	48.6	2.8	102.0	27.2	20.0	48.5	58.0	31.9	12.5	100.0	25.0	1.5
40	36	8	36	10	41	13.8	1.7	48.6	2.8	102.0	27.2	20.0	48.5	58.0	31.9	12.5	100.0	25.0	1.5
40	36	10	36	10	41	17.3	1.7	48.6	2.8	102.0	27.2	20.0	48.5	58.0	31.9	12.5	100.0	25.0	1.4
40	36	15	36	10	41	21.7	2.1	48.6	2.8	102.0	27.2	20.0	48.5	58.0	31.9	12.5	100.0	25.0	1.4
40	36	20	36	25	41	27.2	2.1	48.6	2.8	115.0	29.6	25.0	59.0	61.0	35.1	19.0	124.0	25.0	2.4
40	36	25	36	25	41	34.0	2.8	48.6	2.8	115.0	29.6	25.0	59.0	61.0	35.1	19.0	124.0	25.0	2.3
40	36	32	36	40	41	42.7	2.8	48.6	2.8	129.0	31.8	25.0	71.0	64.0	38.1	26.0	152.0	25.0	3.9
40	36	40	36	40	41	48.6	2.8	48.6	2.8	129.0	31.8	25.0	71.0	64.0	38.1	26.0	152.0	25.0	3.8
50	36	6	36	10	41	10.5	1.2	60.5	2.8	115.0	33.8	20.0	48.5	70.0	37.9	12.5	110.0	30.0	1.9
50	36	8	36	10	41	13.8	1.7	60.5	2.8	115.0	33.8	20.0	48.5	70.0	37.9	12.5	110.0	30.0	1.9
50	36	10	36	10	41	17.3	1.7	60.5	2.8	115.0	33.8	20.0	48.5	70.0	37.9	12.5	110.0	30.0	1.9
50	36	15	36	10	41	21.7	2.1	60.5	2.8	115.0	33.8	20.0	48.5	70.0	37.9	12.5	110.0	30.0	1.9
50	36	15	36	25	41	21.7	2.1	60.5	2.8	122.0	36.2	20.0	54.0	73.0	41.1	19.0	134.0	30.0	3.1
50	36	20	36	25	41	27.2	2.1	60.5	2.8	127.0	36.2	25.0	59.0	73.0	41.1	19.0	134.0	30.0	3.1
50	36	25	36	25	41	34.0	2.8	60.5	2.8	127.0	36.2	25.0	59.0	73.0	41.1	19.0	134.0	30.0	3.0
50	36	32	36	40	41	42.7	2.8	60.5	2.8	142.0	38.4	25.0	71.0	76.0	44.1	26.0	162.0	30.0	5.1
50	36	40	36	40	41	48.6	2.8	60.5	2.8	142.0	38.4	25.0	71.0	76.0	44.1	26.0	162.0	30.0	4.9
50	36	50	36	50	41	60.5	2.8	60.5	2.8	157.0	38.1	30.0	86.5	79.0	46.1	32.0	184.0	30.0	6.5
65	36	6	36	10	41	10.5	1.2	76.3	3.0	131.0	42.4	20.0	48.5	86.0	45.8	12.5	110.0	30.0	2.6
65	36	8	36	10	41	13.8	1.7	76.3	3.0	131.0	42.4	20.0	48.5	86.0	45.8	12.5	110.0	30.0	2.6
65	36	10	36	10	41	17.3	1.7	76.3	3.0	131.0	42.4	20.0	48.5	86.0	45.8	12.5	110.0	30.0	2.6
65	36	15	36	10	41	21.7	2.1	76.3	3.0	131.0	42.4	20.0	48.5	86.0	45.8	12.5	110.0	30.0	2.5
65	36	15	36	25	41	21.7	2.1	76.3	3.0	139.0	44.8	20.0	54.0	89.0	49.0	19.0	134.0	30.0	4.1
65	36	20	36	25	41	27.2	2.1	76.3	3.0	144.0	44.8	25.0	59.0	89.0	49.0	19.0	134.0	30.0	4.1

Other combinations on request

[1] see Butt weld spigots table on page 7, [2] MG = diaphragm size, [3] WKZ = valve body material code, [4] G = valve body weight.

Continued on the next page

Dimensions																			
DN 2	Code 2[1]	DN 1	Code 11	MG [2]	WKZ [3]	D1 (mm)	S1 (mm)	D2 (mm)	S2 (mm)	L (mm)	L1 (mm)	L2 (mm)	L3 (mm)	H (mm)	H1 (mm)	H2 (mm)	B (mm)	B1 (mm)	G [4] (kg)
65	36	25	36	25	41	34.0	2.8	76.3	3.0	144.0	44.8	25.0	59.0	89.0	49.0	19.0	134.0	30.0	4.1
65	36	32	36	40	41	42.7	2.8	76.3	3.0	158.0	46.9	25.0	71.0	92.0	52.0	26.0	162.0	30.0	6.6
65	36	40	36	40	41	48.6	2.8	76.3	3.0	158.0	46.9	25.0	71.0	92.0	52.0	26.0	162.0	30.0	6.5
65	36	50	36	50	41	60.5	2.8	76.3	3.0	174.0	46.6	30.0	86.5	95.0	54.0	32.0	184.0	30.0	8.7
65	36	65	36	80	41	76.3	3.0	76.3	3.0	200.0	49.5	30.0	110.0	103.0	61.9	62.0	250.0	30.0	17.1
80	36	6	36	25	41	10.5	1.2	89.1	3.0	152.0	51.9	20.0	54.0	102.0	55.4	19.0	134.0	30.0	5.0
80	36	8	36	25	41	13.8	1.7	89.1	3.0	152.0	51.9	20.0	54.0	102.0	55.4	19.0	134.0	30.0	5.0
80	36	10	36	25	41	17.3	1.7	89.1	3.0	152.0	51.9	20.0	54.0	102.0	55.4	19.0	134.0	30.0	5.0
80	36	15	36	25	41	21.7	2.1	89.1	3.0	152.0	51.9	20.0	54.0	102.0	55.4	19.0	134.0	30.0	5.0
80	36	20	36	25	41	27.2	2.1	89.1	3.0	157.0	51.9	25.0	59.0	102.0	55.4	19.0	134.0	30.0	5.0
80	36	25	36	25	41	34.0	2.8	89.1	3.0	157.0	51.9	25.0	59.0	102.0	55.4	19.0	134.0	30.0	4.9
80	36	32	36	40	41	42.7	2.8	89.1	3.0	172.0	54.0	25.0	71.0	105.0	58.4	26.0	162.0	30.0	8.1
80	36	40	36	40	41	48.6	2.8	89.1	3.0	172.0	54.0	25.0	71.0	105.0	58.4	26.0	162.0	30.0	7.9
80	36	50	36	50	41	60.5	2.8	89.1	3.0	187.0	53.7	30.0	86.5	107.0	60.4	32.0	184.0	30.0	10.3
80	36	65	36	80	41	76.3	3.0	89.1	3.0	214.0	56.6	30.0	110.0	115.0	68.3	62.0	250.0	30.0	20.4
80	36	80	36	80	41	89.1	3.0	89.1	3.0	214.0	56.6	30.0	110.0	115.0	68.3	62.0	250.0	30.0	19.4
100	36	6	36	25	41	10.5	1.2	114.3	3.0	179.0	65.9	20.0	54.0	127.0	68.0	19.0	134.0	30.0	6.9
100	36	8	36	25	41	13.8	1.7	114.3	3.0	179.0	65.9	20.0	54.0	127.0	68.0	19.0	134.0	30.0	6.9
100	36	10	36	25	41	17.3	1.7	114.3	3.0	179.0	65.9	20.0	54.0	127.0	68.0	19.0	134.0	30.0	6.9
100	36	15	36	25	41	21.7	2.1	114.3	3.0	179.0	65.9	20.0	54.0	127.0	68.0	19.0	134.0	30.0	6.8
100	36	20	36	25	41	27.2	2.1	114.3	3.0	184.0	65.9	25.0	59.0	127.0	68.0	19.0	134.0	30.0	6.8
100	36	25	36	25	41	34.0	2.8	114.3	3.0	184.0	65.9	25.0	59.0	127.0	68.0	19.0	134.0	30.0	6.8
100	36	32	36	40	41	42.7	2.8	114.3	3.0	198.0	68.0	25.0	71.0	130.0	71.0	26.0	162.0	30.0	10.8
100	36	40	36	40	41	48.6	2.8	114.3	3.0	198.0	68.0	25.0	71.0	130.0	71.0	26.0	162.0	30.0	10.7
100	36	50	36	50	41	60.5	2.8	114.3	3.0	214.0	67.7	30.0	86.5	133.0	73.0	32.0	184.0	30.0	14.3
100	36	65	36	80	41	76.3	3.0	114.3	3.0	240.0	70.6	30.0	110.0	140.0	80.9	62.0	250.0	30.0	27.3
100	36	80	36	80	41	89.1	3.0	114.3	3.0	240.0	70.6	30.0	110.0	140.0	80.9	62.0	250.0	30.0	26.3
100	36	100	36	100	41	114.3	3.0	114.3	3.0	278.0	72.4	30.0	146.0	135.0	75.2	75.2	292.0	30.0	33.7

Other combinations on request

[1] see Butt weld spigots table on page 7, [2] MG = diaphragm size, [3] WKZ = valve body material code, [4] G = valve body weight.

T valve bodies

for SMS 3008 pipes, DN 25 - DN 100

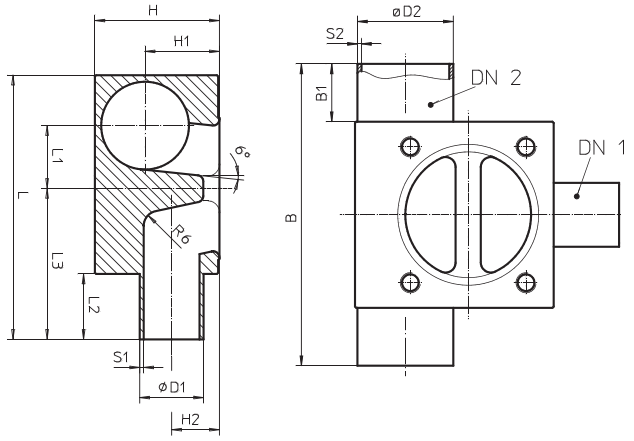

Valve body material	Code
1.4435 (316L/F316L)	41
1.4435 (BN2) Fe<0,5%	43

The valve body dimensions for your order are clearly defined by specification of the codes in the fields with a coloured background in the given sequence.

Note:
Dimensions code 41 = dimensions code 43

Dimensions																			
DN 2	Code 2[1]	DN 1	Code 1[1]	MG[2]	WKZ[3]	D1 (mm)	S1 (mm)	D2 (mm)	S2 (mm)	L (mm)	L1 (mm)	L2 (mm)	L3 (mm)	H (mm)	H1 (mm)	H2 (mm)	B (mm)	B1 (mm)	G[4] (kg)
25	37	10	16	8	41	12.0	1.0	25.0	1.2	66.0	15.0	20.0	36.5	32.0	17.8	8.5	82.0	25.0	0.3
25	37	15	16	25	41	18.0	1.0	25.0	1.2	88.0	18.1	20.0	54.0	38.0	23.3	19.0	124.0	25.0	1.2
25	37	25	37	25	41	25.0	1.2	25.0	1.2	93.0	18.1	25.0	59.0	38.0	23.3	19.0	124.0	25.0	1.1
32	37	10	16	10	41	12.0	1.0	33.7	1.2	88.0	20.5	20.0	48.5	43.0	24.5	12.5	100.0	25.0	0.9
32	37	15	16	10	41	18.0	1.0	33.7	1.2	88.0	20.5	20.0	48.5	43.0	24.5	12.5	100.0	25.0	0.9
32	37	15	16	25	41	18.0	1.0	33.7	1.2	96.0	23.0	20.0	54.0	46.0	27.7	19.0	124.0	25.0	1.5
32	37	25	37	25	41	25.0	1.2	33.7	1.2	101.0	23.0	25.0	59.0	46.0	27.7	19.0	124.0	25.0	1.5
32	37	32	37	40	41	33.7	1.2	33.7	1.2	117.0	25.1	25.0	71.0	50.0	30.7	26.0	152.0	25.0	2.7
40	37	10	16	10	41	12.0	1.0	38.0	1.2	92.0	22.9	20.0	48.5	48.0	26.6	12.5	100.0	25.0	1.0
40	37	15	16	10	41	18.0	1.0	38.0	1.2	92.0	22.9	20.0	48.5	48.0	26.6	12.5	100.0	25.0	1.0
40	37	15	16	25	41	18.0	1.0	38.0	1.2	100.0	25.4	20.0	54.0	51.0	29.8	19.0	124.0	25.0	1.7
40	37	25	37	25	41	25.0	1.2	38.0	1.2	105.0	25.4	25.0	59.0	51.0	29.8	19.0	124.0	25.0	1.7
40	37	32	37	40	41	33.7	1.2	38.0	1.2	119.0	27.5	25.0	71.0	54.0	32.8	26.0	152.0	25.0	2.9
40	37	40	37	40	41	38.0	1.2	38.0	1.2	119.0	27.5	25.0	71.0	54.0	32.8	26.0	152.0	25.0	2.9
50	37	10	16	10	41	12.0	1.0	51.0	1.2	106.0	30.1	20.0	48.5	61.0	33.1	12.5	110.0	30.0	1.4
50	37	15	16	10	41	18.0	1.0	51.0	1.2	106.0	30.1	20.0	48.5	61.0	33.1	12.5	110.0	30.0	1.4
50	37	15	16	25	41	18.0	1.0	51.0	1.2	114.0	32.6	20.0	54.0	64.0	36.3	19.0	134.0	30.0	2.4
50	37	25	37	25	41	25.0	1.2	51.0	1.2	119.0	32.6	25.0	59.0	64.0	36.3	19.0	134.0	30.0	2.4
50	37	32	37	40	41	33.7	1.2	51.0	1.2	133.0	34.7	25.0	71.0	67.0	39.3	26.0	162.0	30.0	4.0
50	37	40	37	40	41	38.0	1.2	51.0	1.2	133.0	34.7	25.0	71.0	67.0	39.3	26.0	162.0	30.0	4.0
50	37	50	37	50	41	51.0	1.2	51.0	1.2	149.0	34.4	30.0	86.5	69.0	41.3	32.0	184.0	30.0	5.2
65	37	10	16	10	41	12.0	1.0	63.5	1.6	119.0	36.7	20.0	48.5	73.0	39.4	12.5	110.0	30.0	1.9
65	37	15	16	10	41	18.0	1.0	63.5	1.6	119.0	36.7	20.0	48.5	73.0	39.4	12.5	110.0	30.0	1.8
65	37	15	16	25	41	18.0	1.0	63.5	1.6	127.0	39.1	20.0	54.0	76.0	42.6	19.0	134.0	30.0	3.1

Other combinations on request
[1] see Butt weld spigots table on page 7, [2] MG = diaphragm size, [3] WKZ = valve body material code, [4] G = valve body weight.

Continued on the next page

Dimensions																			
DN 2	Code 2[1]	DN 1	Code 1[1]	MG [2]	WKZ [3]	D1 (mm)	S1 (mm)	D2 (mm)	S2 (mm)	L (mm)	L1 (mm)	L2 (mm)	L3 (mm)	H (mm)	H1 (mm)	H2 (mm)	B (mm)	B1 (mm)	G [4] (kg)
65	37	25	37	25	41	25.0	1.2	63.5	1.6	132.0	39.1	25.0	59.0	76.0	42.6	19.0	134.0	30.0	3.1
65	37	32	37	40	41	33.7	1.2	63.5	1.6	146.0	41.2	25.0	71.0	79.0	45.6	26.0	162.0	30.0	5.2
65	37	40	37	40	41	38.0	1.2	63.5	1.6	146.0	41.2	25.0	71.0	79.0	45.6	26.0	162.0	30.0	5.1
65	37	50	37	50	41	51.0	1.2	63.5	1.6	162.0	40.9	30.0	86.5	82.0	47.6	32.0	184.0	30.0	6.8
65	37	65	37	80	41	63.5	1.6	63.5	1.6	190.0	43.8	30.0	110.0	96.0	55.5	62.0	250.0	30.0	15.8
80	37	10	16	25	41	12.0	1.0	76.1	1.6	140.0	46.1	20.0	54.0	89.0	48.9	19.0	134.0	30.0	3.9
80	37	15	16	25	41	18.0	1.0	76.1	1.6	140.0	46.1	20.0	54.0	89.0	48.9	19.0	134.0	30.0	3.9
80	37	25	37	25	41	25.0	1.2	76.1	1.6	145.0	46.1	25.0	59.0	89.0	48.9	19.0	134.0	30.0	3.8
80	37	32	37	40	41	33.7	1.2	76.1	1.6	159.0	48.2	25.0	71.0	92.0	51.9	26.0	162.0	30.0	6.4
80	37	40	37	40	41	38.0	1.2	76.1	1.6	159.0	48.2	25.0	71.0	92.0	51.9	26.0	162.0	30.0	6.3
80	37	50	37	50	41	51.0	1.2	76.1	1.6	175.0	47.9	30.0	86.5	94.0	53.9	32.0	184.0	30.0	8.3
80	37	65	37	80	41	63.5	1.6	76.1	1.6	201.0	50.8	30.0	110.0	102.0	61.8	62.0	250.0	30.0	17.0
80	37	80	37	80	41	76.1	1.6	76.1	1.6	201.0	50.8	30.0	110.0	103.0	61.8	62.0	250.0	30.0	16.4
100	37	10	16	25	41	12.0	1.0	101.6	2.0	167.0	59.9	20.0	54.0	114.0	61.6	19.0	134.0	30.0	5.7
100	37	15	16	25	41	18.0	1.0	101.6	2.0	167.0	59.9	20.0	54.0	114.0	61.6	19.0	134.0	30.0	5.6
100	37	25	37	25	41	25.0	1.2	101.6	2.0	172.0	59.9	25.0	59.0	114.0	61.6	19.0	134.0	30.0	5.6
100	37	32	37	40	41	33.7	1.2	101.6	2.0	186.0	62.0	25.0	71.0	117.0	64.6	26.0	162.0	30.0	9.1
100	37	40	37	40	41	38.0	1.2	101.6	2.0	186.0	62.0	25.0	71.0	117.0	64.6	26.0	162.0	30.0	9.0
100	37	50	37	50	41	51.0	1.2	101.6	2.0	201.0	61.7	30.0	86.5	120.0	66.6	32.0	184.0	30.0	12.0
100	37	65	37	80	41	63.5	1.6	101.6	2.0	228.0	64.6	30.0	110.0	128.0	74.5	62.0	250.0	30.0	24.1
100	37	80	37	80	41	76.1	1.6	101.6	2.0	228.0	64.6	30.0	110.0	128.0	74.5	62.0	250.0	30.0	23.3
100	37	100	37	100	41	101.6	2.0	101.6	2.0	266.0	66.4	30.0	146.0	122.0	68.8	68.8	292.0	30.0	29.5

Other combinations on request

[1] see Butt weld spigots table on page 7, [2] MG = diaphragm size, [3] WKZ = valve body material code, [4] G = valve body weight.

T valve bodies
with clamp connections

Butt weld spigots	Code
Spigots DIN 11850, series 1	16
Spigots DIN 11850, series 2	17
Spigots DIN 11866, series A	1A
Spigots SMS 3008	37
Spigots ASME BPE	59
Spigots EN ISO 1127	60

Clamp connections	Code
Clamps following ASME BPE for EN ISO 1127 pipes, clamp DN1 fully machined	8K
Clamp following ASME BPE for EN ISO 1127 pipes	82
Clamps following DIN for EN ISO 1127 pipes, clamp DN1 fully machined	8L
Clamps following DIN for EN ISO 1127 pipes	83
Clamps DIN 32676 for DIN 11850 pipes, clamp DN1 fully machined	8A
Clamps DIN 32676 for 11850 pipes	86
Clamps SMS 3017 for SMS 3008 pipes	87
Clamps ASME BPE for ASME BPE pipes, clamp DN1 fully machined	80
Clamps ASME BPE for ASME BPE pipes	88

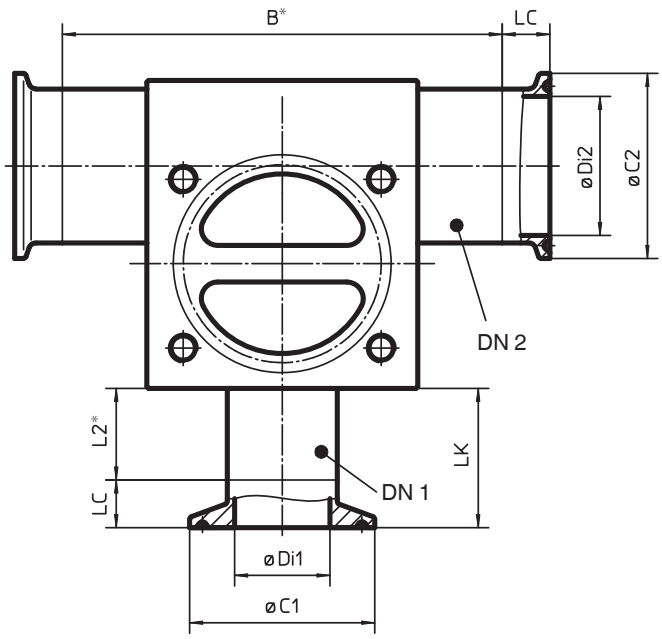

* see tables on pages 49-63

Dimensions of clamp connections for T valve bodies																			
For butt weld spigots	Code 60				Code 60				Code 16, 17				Code 37			Code 59			
Clamp connections	Code 82			Code 8K	Code 83			Code 8L	Code 86			Code 8A	Code 87			Code 88			Code 80
DN	øDi1/ Di2	øC1/ C2	LC	LK	øDi1/ Di2	øC1/ C2	LC	LK	øDi1/ Di2	øC1/ C2	LC	LK	øDi1/ Di2	øC1/ C2	LC	øDi1/ Di2	øC1/ C2	LC	LK
8	10.30	25.40	13	20	10.30	34.00	13	20	-	-	-	-	-	-	-	-	-	-	13
10	14.00	25.40	13	20	14.00	34.00	13	20	10.00	34.00	13	20	-	-	-	-	-	-	13
15	18.10	50.50	13	-	18.10	34.00	13	20	16.00	34.00	13	20	-	-	-	9.40	25.00	13	20
20	23.70	50.50	13	-	23.70	50.50	13	-	20.00	34.00	13	20	-	-	-	15.75	25.00	13	20
25	29.70	50.50	13	-	29.70	50.50	13	-	26.00	50.50	13	-	22.60	50.50	13	22.10	50.50	13	-
32	38.40	64.00	13	-	38.40	64.00	13	-	32.00	50.50	13	-	31.30	50.50	13	-	-	-	-
40	44.30	64.00	13	-	44.30	64.00	13	-	38.00	50.50	13	-	35.60	50.50	13	34.80	50.50	13	-
50	56.30	77.50	13	-	56.30	77.50	13	-	50.00	64.00	13	-	48.60	64.00	13	47.50	64.00	13	-
65	72.10	91.00	24	-	72.10	91.00	24	-	66.00	91.00	24	-	60.30	77.50	24	60.20	77.50	24	-
80	84.30	106.00	24	-	84.30	106.00	24	-	81.00	106.00	24	-	72.90	91.00	24	72.90	91.00	24	-
100	109.70	144.50	24	-	109.70	130.00	24	-	100.00	119.00	24	-	97.60	119.00	24	97.38	119.00	24	-

Order code - T bodies

Order example for T valve bodies (diaphragm size 8, A version) with butt weld spigots:

Type	Nominal size DN 1	Body configuration	Connection DN 1	Valve body material	Nominal size DN 2	Connection DN 2	Additional data
A	B	C	D	E	G	H	K
K601	15	A	59	41	40	59	1508

Order example for T valve bodies (diaphragm size 10) with clamp connection* at the branch:

Type	Nominal size DN 1	Body configuration	Connection DN 1	Valve body material	Nominal size DN 2	Connection DN 2	Additional data
A	B	C	D	E	G	H	K
K612	15	T	88	41	25	59	1536

Order example for T valve bodies (from diaphragm size 25) with clamp connections*:

Type	Nominal size DN 1	Body configuration	Connection DN 1	Valve body material	Nominal size DN 2	Connection DN 2	Additional data
A	B	C	D	E	G	H	K
K600	15	T	88	41	50	88	1507

DN 1 = branch, DN 2 = main pipe
* Unless otherwise indicated, the clamp connections are welded on (main pipe) or fully machined (branch).

Materials and certificates

Type	Designation of the test certificate in accordance with EN 10204	Content of the certificate	Confirmation of the certificate by
2.1	Certificate of compliance with the order	Confirmation of compliance with the order	the manufacturer
2.2	Test report	Confirmation of compliance with the order with specification of results of non-specific testing	the manufacturer
3.1	Inspection certificate 3.1	Confirmation of compliance with the order with specification of results of specific testing	the manufacturer acceptance officer independent of the production division
3.2	Inspection certificate 3.2	Confirmation of compliance with the order with specification of results of specific testing	the manufacturer acceptance officer independent of the production division and the acceptance officer commissioned by the purchaser or the acceptance officer named in the official regulations

The table above provides an overview of the possible certificates which are generally available. The type of certificate and its content must be specified exactly before ordering to be able to provide the required documents. Later requests of certificates may not be possible or possible only under certain conditions.

Our specialists are happy to answer any questions you might have.

Distributed by:

Tri-Canada

1000 Edgeley Blvd. #2, Vaughan, ON L4K 4V4
Tel: **905.677.9000** • Toll Free: **1.800.486.7863**
www.tricanada.com

TÜVRheinland®
CERT
ISO 9001

TÜVRheinland®
CERT
ISO 14001

Subject to alteration · 04/2016 · 88471495

GEMÜ Gebr. Müller Apparatebau GmbH & Co. KG
Fritz-Müller-Straße 6-8 · D-74653 Ingelfingen-Criesbach
Phone +49 (0)7940 123-0 · info@gemue.de

*www.**gemu-group**.com*