Distributed by:

Tri-Canada

1000 Edgeley Blvd. #2, Vaughan, ON L4K 4V4
Tel: **905.677.9000** • Toll Free: **1.800.486.7863**
www.tricanada.com

GEMÜ®

Diaphragm Valve, Metal

Construction

The GEMÜ 601, 612 and 673 manually operated diaphragm valves have a temperature resistant plastic handwheel, GEMÜ 602 has a stainless steel handwheel. Bonnet and internals are made all of stainless steel.
An integral optical position indicator and a seal adjuster to increase service life of the diaphragm are included as standard.

Features

- Suitable for inert and corrosive* liquid and gaseous media
- Chemical resistance of bonnet
- CIP/SIP cleaning and sterilizing capabilities
- Autoclave capability
- Insensitive to particulate media
- Valve body and diaphragm available in various materials and designs
- Compact design (ideal when space is at a premium)
- Stepless minimum flow regulation due to seal adjuster
- Versions according to ATEX on request

Advantages

- Hermetic separation between medium and actuator
- Optional flow direction, will seal in either flow direction up to full operating pressure
- Optional mounting position
- Long service life of the diaphragm due to patented seal adjuster (US-Pat. 5 377 956)
- Valve body also available in multi-port designs (M-block and T-body) or as tank bottom valve body

*see information on working medium on page 2

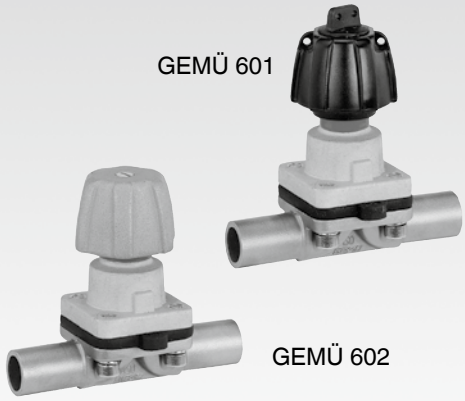

GEMÜ 601

GEMÜ 602

GEMÜ 612

GEMÜ 673

Sectional drawing

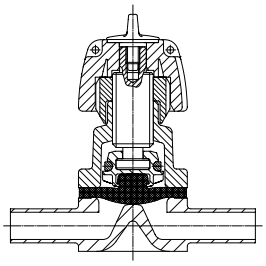

GEMÜ 601

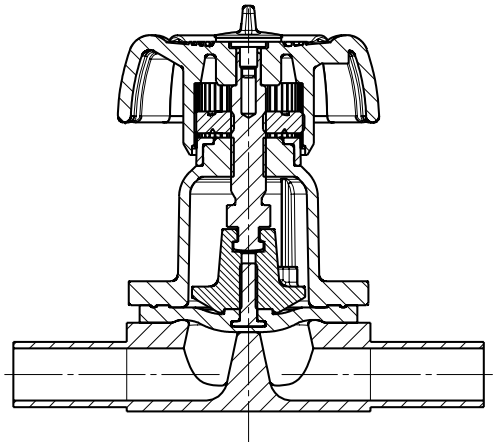

GEMÜ 612

GEMÜ®

601, 602, 612, 673

Technical data

Working medium

Corrosive, inert, gaseous and liquid media which have no negative impact on the physical and chemical properties of the body and diaphragm material.

Ambient conditions

Max. ambient temperature	60 °C

Type	Diaphragm size	Nominal size	Max. operating pressure [bar]	
		DN	EPDM / FPM	PTFE
GEMÜ 601/602	8	4, 6, 8, 10, 15	10	6
GEMÜ 612	10	10, 12, 15, 20	10	6
GEMÜ 673	25	15, 20, 25	10	6
	40	32, 40	10	6
	50	50	10	6

All pressures are gauge pressures. Operating pressure values were determined with static operating pressure applied on one side of a closed valve. Sealing at the valve seat and atmospheric sealing is ensured for the given values.
Information on operating pressures applied on both sides and for high purity media on request.

Kv values [m^3/h]

Type	MG	DN	DIN Code 0	DIN 11850 Series 1 Code 16	DIN 11850 Series 2 Code 17	DIN 11850 Series 3 Code 18	SMS 3008 Code 37	ASME BPE Code 59	EN ISO 1127 Code 60
GEMÜ 601/602	8	4	0.5	-	-	-	-	-	-
		6	1.1	-	-	-	-	-	1.2
		8	1.3	-	-	-	-	0.6	2.2
		10	-	2.1	2.1	2.1	-	1.3	-
		15	-	-	-	-	-	2.0	-
GEMÜ 612	10	10	-	2.4	2.4	2.4	-	2.2	3.3
		15	3.3	3.8	3.8	3.8	-	2.2	4.0
		20	-	-	-	-	-	3.8	-
GEMÜ 673	25	15	4.1	4.7	4.7	4.7	-	-	7.4
		20	6.3	7.0	7.0	7.0	-	4.4	13.2
		25	13.9	15.0	15.0	15.0	12.6	12.2	16.2
	40	32	25.3	27.0	27.0	27.0	26.2	-	30.0
		40	29.3	30.9	30.9	30.9	30.2	29.5	32.8
	50	50	46.5	48.4	48.4	48.4	51.7	50.6	55.2

Kv values determined acc. to IEC 534 standard, inlet pressure 6 bar, Δ p 1 bar, stainless steel valve body and soft elastomer diaphragm.
MG = diaphragm size

Media- and Sterilization temperature [°C]

Diaphragm	Liquid Media		Sterilization temperature**	Code
	Min.	Max.		
FPM	-10	90	not applicable	4/4A
EPDM	-10	100	150 °C, max. 60 min	13/3A
EPDM	-10	100	150 °C, max. 180 min	17
PTFE	-10	100	Constant temperature* 150 °C	52/5A
PTFE	-10	100	Constant temperature* 150 °C	5E

* The valves concerned must be serviced regulary if steam is applied continuously
** Sterilization temperature is only valid for steam and superheated water

Order data

Valve type	Code
GEMÜ 601 diaphragm size 8	601
GEMÜ 602 diaphragm size 8 stainless st. handwheel	602
GEMÜ 612 diaphragm size 10	612
GEMÜ 673 diaphragm size 25 - 50	673

Body configuration	Code
Tank valve body	B**
2/2-way body	D
Multi-port design	M**
T body	T*
* For dimensions see T Valves brochure	
** Dimensions and versions on request	

Connection	Code
Butt weld spigots	
Spigots DIN	0
Spigots DIN 11850, series 1	16
Spigots DIN 11850, series 2	17
Spigots DIN 11850, series 3	18
Spigots DIN 11866, series A	1A
Spigots DIN 11866, series B	1B
Spigots JIS-G 3447	35
Spigots JIS-G 3459	36
Spigots SMS 3008	37
Spigots BS 4825, Part 1	55
Spigots ASME BPE	59
Spigots EN ISO 1127	60
Spigots ANSI/ASME B36.19M, Schedule 10s	63
Spigots ANSI/ASME B36.19M, Schedule 40s	65
Threaded connections	
Threaded sockets DIN ISO 228	1
Threaded spigots DIN 11851	6
One side threaded spigot, other side cone spigot and union nut, DIN 11851	62
Aseptic unions on request	
Flanges (GEMÜ 673)	
Flanges EN 1092 / PN16 / form B, length EN 558, series 1, ISO 5752, basic series 1	8
Flanges ANSI CLASS 125/150 RF, length MSS SP-88	38
Flanges ANSI CLASS 125/150 RF, length EN 558, series 1, ISO 5752, basic series 1	39
Clamp connections	
Clamps ASME BPE for pipe ASME BPE, length ASME BPE	80
Clamps DIN 32676 series B for pipe EN ISO 1127, length EN 558, series 7	82
Clamps ASME BPE for pipe ASME BPE, length EN 558, series 7	88
Clamps DIN 32676 series A for pipe DIN 11850, length EN 558, series 7	8A
Clamps SMS 3017 for pipe SMS 3008, length EN 558, series 7	8E
For overview of available valve bodies see page 12	

Valve body material	Code
EN-GJS-400-18-LT (SG iron 40.3) PFA lined	17
EN-GJS-400-18-LT (SG iron 40.3) PP lined	18
1.4435 - BN2 (CF3M), investment casting Fe<0.5%	32
1.4435 (ASTM A 351 CF3M, ≙ 316L), investment casting	34
1.4408, investment casting	37
1.4435 (316L), forged body	40
1.4435 (BN2), forged body Fe<0.5%	42

Diaphragm material		Code
FPM	4	4A*
EPDM	13	3A*
EPDM	17	17*
PTFE/EPDM convex, PTFE loose	5E	-
PTFE/EPDM, PTFE lamin.	52**	5A*
* for diaphragm size 8	** for diaphragm size 10	
Material complies with FDA requirements, except codes 4 and 4A		

Control function	Code
Manually operated	0

Bonnet version	Code
With seal adjuster, black handwheel GEMÜ 601 diaphragm size 8	0TS
With seal adjuster, metal handwheel GEMÜ 602 diaphragm size 8	0TM
With seal adjuster, black handwheel GEMÜ 612 diaphragm size 10	1TS
With seal adjuster, black handwheel GEMÜ 673 diaphragm size 25	2TS
With seal adjuster, black handwheel GEMÜ 673 diaphragm size 40	3TS
With seal adjuster, black handwheel GEMÜ 673 diaphragm size 50	4TS

For further order data see page 4

Order data

Valve body surface finish, internal contour				
		Forged body Code 40, 42	Investment casting Code 32, 34	Code
Ra ≤ 6.3 µm	blasted internal/external	-	X	1500
--	electropolished	-	X	1509
Ra ≤ 0.8 µm	mechanically polished internal, blasted external	X	X	1502
Ra ≤ 0.8 µm	electropolished internal/external	X	-	1503
Ra ≤ 0.6 µm	mechanically polished internal, blasted external	X	X	1507
Ra ≤ 0.6 µm	electropolished internal/external	X	-	1508
Ra ≤ 0.4 µm	mechanically polished internal, blasted external	X	-	1536
Ra ≤ 0.4 µm	electropolished internal/external	X	-	1537
Ra ≤ 0.25 µm	mechanically polished internal, blasted external	X	-	1527
Ra ≤ 0.25 µm	electropolished internal/external	X	-	1516

Ra acc. to DIN 4768; at defined reference points
Surface finish data refer to medium wetted surfaces

Order example	601	8	D	60	34	17	0	0TS	1500
Type	601								
Nominal size		8							
Body configuration (code)			D						
Connection (code)				60					
Valve body material (code)					34				
Diaphragm material (code)						17			
Control function (code)							0		
Bonnet version (code)								0TS	
Surface finish (code)									1500

Dimensions [mm]

Bonnet dimensions				
Type	**Diaphragm size**	**A**	**Ø B**	**Weight [kg]**
GEMÜ 601	8	58	32	0.10
GEMÜ 602	8	54	32	0.15
GEMÜ 612	10	80	60	0.40
GEMÜ 673	25	102	90	0.70
	40	119	114	1.30
	50	136	140	2.05

GEMÜ 601 / 602

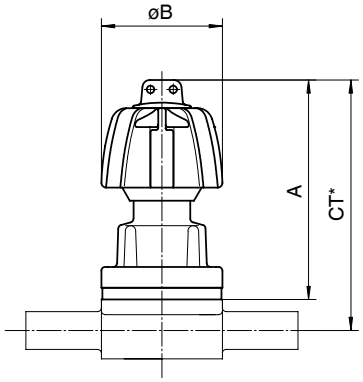

GEMÜ 601

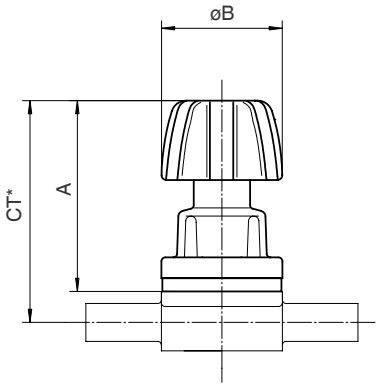

GEMÜ 602

GEMÜ 612 / 673

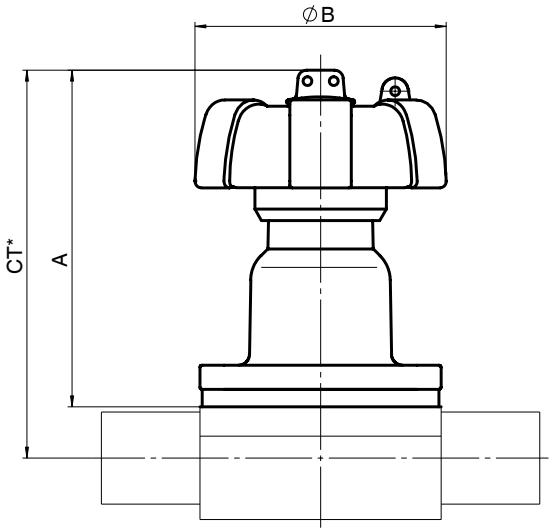

* CT = A + H1 (see body dimensions)

Body dimensions [mm]

Butt weld spigots, connection code 0, 16, 17, 18
Valve body material: investment casting (code 34), forged body (code 40)

										DIN Series 0 Code 0		DIN 11850 Series 1 Code 16		DIN 11850 Series 2 Code 17		DIN 11850 Series 3 Code 18		Weight [kg]
Type	MG	DN	NPS	f*	øg*	L	c	H1*	H1**	ød	s	ød	s	ød	s	ød	s	
GEMÜ 601, 602	8	4	-	-	-	72	20	8.5		6	1.0	-	-	-	-	-	-	0.09
		6	-	-	-	72	20	8.5		8	1.0	-	-	-	-	-	-	0.09
		8	1/4”	-	-	72	20	8.5		10	1.0	-	-	-	-	-	-	0.09
		10	3/8”	-	-	72	20	8.5		-	-	12	1.0	13	1.5	14	2.0	0.09
		15	1/2”	-	-	72	20	8.5		-	-	-	-	-	-	-	-	0.09
GEMÜ 612	10	10	3/8”	30	13.5	108	25	12.5		-	-	12	1.0	13	1.5	14	2.0	0.30
		15	1/2”	30	13.5	108	25	12.5		18	1.5	18	1.0	19	1.5	20	2.0	0.30
		20	3/4”	30	13.5	108	25	12.5		-	-	-	-	-	-	-	-	0.30
GEMÜ 673	25	15	1/2”	40	13.5	120	25	13.0	19.0	18	1.5	18	1.0	19	1.5	20	2.0	0.62
		20	3/4”	40	13.5	120	25	16.0	19.0	22	1.5	22	1.0	23	1.5	24	2.0	0.58
		25	1”	40	13.5	120	25	19.0	19.0	28	1.5	28	1.0	29	1.5	30	2.0	0.55
	40	32	11/4”	68	13.5	153	25	24.0	26.0	34	1.5	34	1.0	35	1.5	36	2.0	1.45
		40	11/2”	75	13.5	153	25	26.0	26.0	40	1.5	40	1.0	41	1.5	42	2.0	1.32
	50	50	2”	90	13.5	173	30	32.0	32.0	52	1.5	52	1.0	53	1.5	54	2.0	2.25

* only for investment cast design ** only for forged design MG = diaphragm size
For materials see overview on last page

Butt weld spigots, connection code 1A, 1B, 60
Valve body material: investment casting (code 34), forged body (code 40)

										DIN 11866 Series A Code 1A		DIN 11866 Series B Code 1B		EN ISO 1127 Code 60		Weight [kg]
Type	MG	DN	NPS	f*	øg*	L	c	H1*	H1**	ød	s	ød	s	ød	s	
GEMÜ 601, 602	8	4	-	-	-	72	20	8.5		-	-	-	-	-	-	0.09
		6	-	-	-	72	20	8.5		8	1.0	10.2	1.6	10.2	1.6	0.09
		8	1/4”	-	-	72	20	8.5		10	1.0	13.5	1.6	13.5	1.6	0.09
		10	3/8”	-	-	72	20	8.5		13	1.5	-	-	-	-	0.09
		15	1/2”	-	-	72	20	8.5		-	-	-	-	-	-	0.09
GEMÜ 612	10	10	3/8”	30	13.5	108	25	12.5		13	1.5	17.2	1.6	17.2	1.6	0.30
		15	1/2”	30	13.5	108	25	12.5		19	1.5	21.3	1.6	21.3	1.6	0.30
		20	3/4”	30	13.5	108	25	12.5		-	-	-	-	-	-	0.30
GEMÜ 673	25	15	1/2”	40	13.5	120	25	13.0	19.0	19	1.5	21.3	1.6	21.3	1.6	0.62
		20	3/4”	40	13.5	120	25	16.0	19.0	23	1.5	26.9	1.6	26.9	1.6	0.58
		25	1”	40	13.5	120	25	19.0	19.0	29	1.5	33.7	2.0	33.7	2.0	0.55
	40	32	11/4”	68	13.5	153	25	24.0	26.0	35	1.5	42.4	2.0	42.4	2.0	1.45
		40	11/2”	75	13.5	153	25	26.0	26.0	41	1.5	48.3	2.0	48.3	2.0	1.32
	50	50	2”	90	13.5	173	30	32.0	32.0	53	1.5	60.3	2.0	60.3	2.0	2.25

* only for investment cast design ** only for forged design MG = diaphragm size
For materials see overview on last page

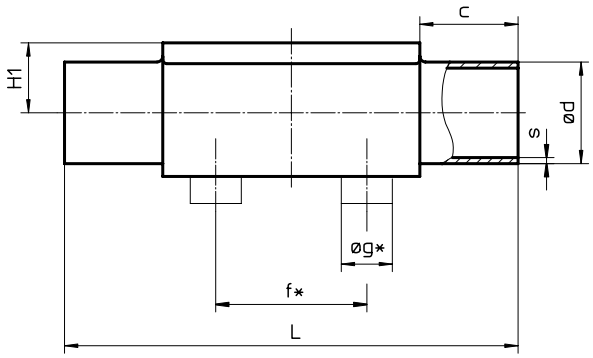

Body dimensions [mm]

Butt weld spigots, connection code 35, 36, 37
Valve body material: investment casting (code 34), forged body (code 40)

										JIS-G 3447 Code 35		JIS-G 3459 Code 36		SMS 3008 Code 37		Weight [kg]
Type	MG	DN	NPS	f*	øg*	L	c	H1*	H1**	ød	s	ød	s	ød	s	
GEMÜ 601, 602	8	4	-	-	-	72	20	8.5		-	-	-	-	-	-	0.09
		6	-	-	-	72	20	8.5		-	-	10.5	1.20	-	-	0.09
		8	1/4”	-	-	72	20	8.5		-	-	13.8	1.65	-	-	0.09
		10	3/8”	-	-	72	20	8.5		-	-	-	-	-	-	0.09
		15	1/2”	-	-	72	20	8.5		-	-	-	-	-	-	0.09
GEMÜ 612	10	10	3/8”	30	13.5	108	25	12.5		-	-	17.3	1.65	-	-	0.30
		15	1/2”	30	13.5	108	25	12.5		-	-	21.7	2.10	-	-	0.30
		20	3/4”	30	13.5	108	25	12.5		-	-	-	-	-	-	0.30
GEMÜ 673	25	15	1/2”	40	13.5	120	25	13.0	19.0	-	-	21.7	2.10	-	-	0.62
		20	3/4”	40	13.5	120	25	16.0	19.0	-	-	27.2	2.10	-	-	0.58
		25	1”	40	13.5	120	25	19.0	19.0	25.4	1.2	34.0	2.80	25.0	1.2	0.55
	40	32	11/4”	68	13.5	153	25	24.0	26.0	31.8	1.2	42.7	2.80	33.7	1.2	1.45
		40	11/2”	75	13.5	153	25	26.0	26.0	38.1	1.2	48.6	2.80	38.0	1.2	1.32
	50	50	2”	90	13.5	173	30	32.0	32.0	50.8	1.5	60.5	2.80	51.0	1.2	2.25

* only for investment cast design ** only for forged design MG = diaphragm size
For materials see overview on last page

Butt weld spigots, connection code 55, 59, 63, 65
Valve body material: investment casting (code 34), forged body (code 40)

										BS 4825 Code 55		ASME BPE Code 59		ANSI/ASME B36.19M 10s Code 63		ANSI/ASME B36.19M 40s Code 65		Weight [kg]
Type	MG	DN	NPS	f*	øg*	L	c	H1*	H1**	ød	s	ød	s	ød	s	ød	s	
GEMÜ 601, 602	8	4	-	-	-	72	20	8.5		-	-	-	-	-	-	-	-	0.09
		6	-	-	-	72	20	8.5		-	-	-	-	10.3	1.24	10.3	1.73	0.09
		8	1/4”	-	-	72	20	8.5		6.35	1.2	6.35	0.89	13.7	1.65	13.7	2.24	0.09
		10	3/8”	-	-	72	20	8.5		9.53	1.2	9.53	0.89	-	-	-	-	0.09
		15	1/2”	-	-	72	20	8.5		12.70	1.2	12.70	1.65	-	-	-	-	0.09
GEMÜ 612	10	10	3/8”	30	13.5	108	25	12.5		9.53	1.2	9.53	0.89	17.1	1.65	17.1	2.31	0.30
		15	1/2”	30	13.5	108	25	12.5		12.70	1.2	12.70	1.65	21.3	2.11	21.3	2.77	0.30
		20	3/4”	30	13.5	108	25	12.5		19.05	1.2	19.05	1.65	-	-	-	-	0.30
GEMÜ 673	25	15	1/2”	40	13.5	120	25	13.0	19.0	-	-	-	-	21.3	2.11	21.3	2.77	0.62
		20	3/4”	40	13.5	120	25	16.0	19.0	19.05	1.2	19.05	1.65	26.7	2.11	26.7	2.87	0.58
		25	1”	40	13.5	120	25	19.0	19.0	-	-	25.40	1.65	33.4	2.77	33.4	3.38	0.55
	40	32	11/4”	68	13.5	153	25	24.0	26.0	-	-	-	-	42.2	2.77	42.2	3.56	1.45
		40	11/2”	75	13.5	153	25	26.0	26.0	-	-	38.10	1.65	48.3	2.77	48.3	3.68	1.32
	50	50	2”	90	13.5	173	30	32.0	32.0	-	-	50.80	1.65	60.3	2.77	60.3	3.91	2.25

* only for investment cast design ** only for forged design MG = diaphragm size
For materials see overview on last page

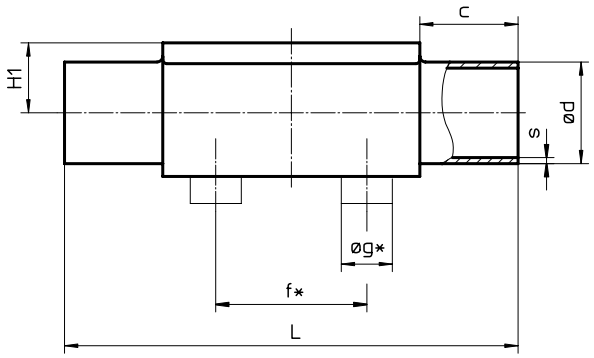

Body dimensions [mm]

Threaded sockets, connection code 1 valve body material: investment casting (code 37)										
Type	MG	DN	R	H	H1	t	L	SW2	Number of flats	Weight [kg]
GEMÜ 601/602	8	8	G 1/4	19	8,5	12	72	17	2	0,09
GEMÜ 612	10	12	G 3/8	23	10,5	13	55	22	2	0,17
		15	G 1/2	29	13,5	15	68	24	2	0,26
GEMÜ 673	25	15	G 1/2	30	16,0	9	85	27	6	0,32
		20	G 3/4	33	17,0	10	85	32	6	0,34
		25	G 1	37	17,0	13	110	41	6	0,39
	40	32	G 11/4	50	25,0	16	120	50	8	0,88
		40	G 11/2	52	25,0	18	140	55	8	0,93
	50	50	G 2	69	34,0	18	165	70	8	1,56

MG = Diaphragm size For materials see overview on last page

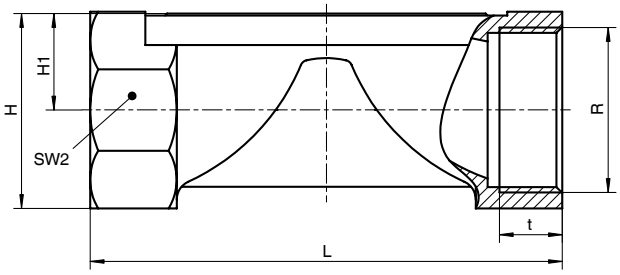

Body dimensions [mm]

Threaded connections, connection code 6, 62 Valve body material: investment casting (code 34), forged body (code 40)											
Type	**MG**	**DN**	**H1***	**H1****	**f***	**øg***	**ød1**	**Thread to DIN 405 R**	**Code 6 L**	**Code 62 L**	**Weight [kg]**
GEMÜ 601/602	8	10	8.5	-	-	-	10.0	RD 28 x 1/8	92	90	0.21
GEMÜ 612	10	10	12.5	-	30.0	13.5	10.0	RD 28 x 1/8	118	116	0.33
		15	12.5	-	30.0	13.5	16.0	RD 34 x 1/8	118	116	0.35
GEMÜ 673	25	15	13.0	19	40.0	13.5	16.0	RD 34 x 1/8	118	116	0.71
		20	16.0	19	40.0	13.5	20.0	RD 44 x 1/6	118	114	0.78
		25	19.0	19	40.0	13.5	26.0	RD 52 x 1/6	128	127	0.79
	40	32	24.0	26	68.0	13.5	32.0	RD 58 x 1/6	147	147	1.66
		40	26.0	26	75.0	13.5	38.0	RD 65 x 1/6	160	160	1.62
	50	50	32.0	32	90.0	13.5	50.0	RD 78 x 1/6	191	191	2.70

* only for investment cast design ** only for forged design MG = diaphragm size For materials see overview on last page

Code 6

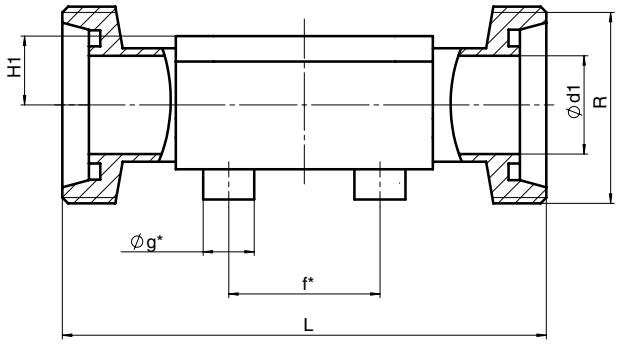

Code 62

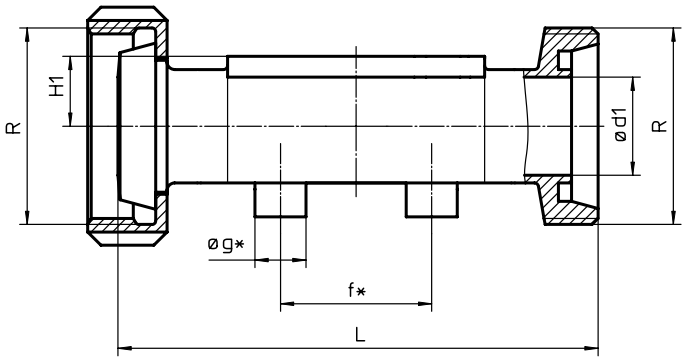

Body dimensions [mm]

Flanges - DIN EN 1092, connection code 8 Valve body material: GGG 40.3 (code 17, 18), 1.4435 (code 34, 40)											
Type	MG	DN	øD	øk	øL	Number of bolts	H1			FTF	Weight [kg]
							Material code 17, 18	Material code 34	Material code 40		
GEMÜ 673	25	15	95	65	14	4	18.0	13.0	19.0	130*	1.85
		20	105	75	14	4	20.5	16.0	19.0	150	2.35
		25	115	85	14	4	23.0	19.0	19.0	160	2.85
	40	32	140	100	18	4	28.7	24.0	26.0	180	4.90
		40	150	110	18	4	33.0	26.0	26.0	200	5.65
	50	50	165	125	18	4	39.0	32.0	32.0	230	7.45

*Material code 34, 40 FTF = 150 (no DIN length)
MG = diaphragm size For materials see overview on last page

Flanges - ANSI class 150 RF, connection code 38. 39 Valve body material: GGG 40.3 (code 17, 18), 1.4435 (code 34, 40)												
Type	MG	DN	øD	øk	øL	Number of bolts	H1			FTF		Weight [kg]
							Material code 17, 18	Material code 34	Material code 40	Connection code 38	Connection code 39	
GEMÜ 673	25	15	90	60.3	15.9	4	18.0	13.0	19.0	-	130	1.85
		20	100	69.9	15.9	4	20.5	16.0	19.0	146	150	2.35
		25	110	79.4	15.9	4	23.0	19.0	19.0	146	160	2.85
	40	32	115	88.9	15.9	4	28.7	24.0	26.0	-	180	4.90
		40	125	98.4	15.9	4	33.0	26.0	26.0	175	200	5.65
	50	50	150	120.7	19.0	4	39.0	32.0	32.0	200	230	7.45

MG = diaphragm size For materials see overview on last page

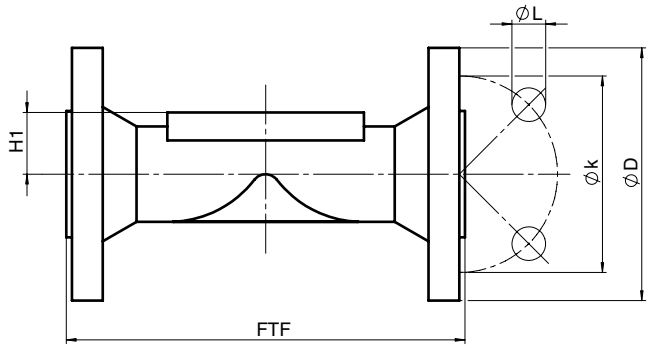

Body dimensions [mm]

Clamp connections, connection code 80, 82, 88, 8A, 8E Valve body material: forged body (code 40)																					
					for pipe ASME BPE Code 80			for pipe EN ISO 1127 Code 82			for pipe ASME BPE Code 88			for pipe DIN 11850 Code 8A			for pipe SMS 3008 Code 8E			Weight [kg]
Type	MG	DN	NPS	H1	ød1	ød3	L	ød1	ød3	L	ød1	ød3	L	ød1	ød3	L	ød1	ød3	L	
GEMÜ 601/602	8	6	1/8 ”	8.5	-	-	-	7.0	25.0	63.5	-	-	-	6	25.0	63.5	-	-	-	-
		8	1/4”	8.5	4.57	25.0	63.5	10.3	25.0	63.5	-	-	-	8	25.0	63.5	-	-	-	0.15
		10	3/8”	8.5	7.75	25.0	63.5	-	-	-	-	-	-	10	34.0	88.9	-	-	-	0.18
		15	1/2”	8.5	9.40	25.0	63.5	-	-	-	9.40	25.0	108	-	-	-	-	-	-	0.18
GEMÜ 612	10	10	3/8”	12.5	-	-	-	14.0	25.0	108.0	-	-	-	10	34.0	108.0	-	-	-	0.30
		15	1/2”	12.5	9.40	25.0	88.9	18.1	50.5	108.0	9.40	25.0	108	16	34.0	108.0	-	-	-	0.43
		20	3/4”	12.5	15.75	25.0	101.6	-	-	-	15.75	25.0	117	-	-	-	-	-	-	0.43
GEMÜ 673	25	15	1/2”	19.0	-	-	-	18.1	50.5	108.0	-	-	-	16	34.0	108.0	-	-	-	0.75
		20	3/4”	19.0	15.75	25.0	101.6	23.7	50.5	117.0	15.75	25.0	117	20	34.0	117.0	-	-	-	0.71
		25	1”	19.0	22.10	50.5	114.3	29.7	50.5	127.0	22.10	50.5	127	26	50.5	127.0	22.6	50.5	127	0.63
	40	32	1 1/4”	26.0	-	-	-	38.4	64.0	146.0	-	-	-	32	50.5	146.0	31.3	50.5	146	1.62
		40	1 1/2”	26.0	34.80	50.5	139.7	44.3	64.0	159.0	34.80	50.5	159	38	50.5	159.0	35.6	50.5	159	1.50
	50	50	2”	32.0	47.50	64.0	158.8	56.3	77.5	190.0	47.50	64.0	190	50	64.0	190.0	48.6	64.0	190	2.50

MG = Diaphragm size

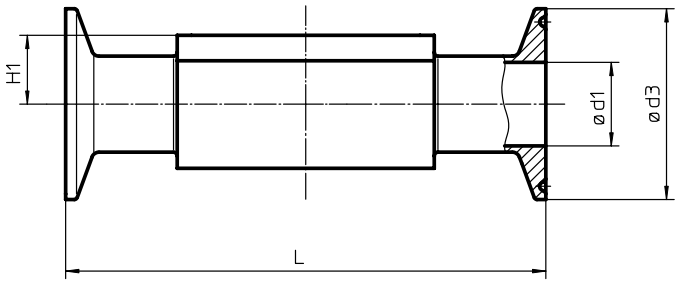

Overview of valve bodies for GEMÜ 601, 602, 612, 673

Type			Threaded connections					Spigots																					
	Connection code		1	6		62		0		16		17		18		1A	1B	35		36	37		55		59		60		63	65
	Material code		37	34	40	34	40	34	40	34	40	34	40	34	40	40	40	34	40	40	34	40	34	40	34	40	34	40	40	40
	MG	DN																												
GEMÜ 601/602	8	4	-	-	-	-	-	X	X	-	-	-	-	-	-	-	-	-	-	-	-	-	-	-	-	-	-	-	-	-
		6	-	-	-	-	-	X	X	-	-	-	-	-	-	X	X	-	-	X	-	-	-	-	-	-	-	-	X	X
		8	X	-	-	-	-	X	X	-	-	-	-	-	-	X	X	-	-	X	-	-	X	X	X	X	X	X	X	X
		10	-	W	W	W	W	-	-	X	X	X	X	X	X	X	-	-	-	-	-	-	X	X	X	X	-	-	-	-
		15	-	-	-	-	-	-	-	-	-	-	-	-	-	-	-	-	-	-	-	-	X	X	X	X	-	-	-	-
GEMÜ 612	10	10	-	W	W	W	W	-	-	X	X	X	X	X	X	X	X	-	-	X	-	-	-	X	-	X	X	X	X	X
		12	X	-	-	-	-	-	-	-	-	-	-	-	-	-	-	-	-	-	-	-	-	-	-	-	-	-	-	-
		15	X	W	W	W	W	X	X	X	X	X	X	X	X	X	X	-	-	X	-	-	X	X	-	X	X	X	X	X
		20	-	-	-	-	-	-	-	-	-	-	-	-	-	-	-	-	-	-	-	-	X	X	X	X	-	-	-	-
GEMÜ 673	25	15	X	W	W	W	W	X	X	X	X	X	X	-	X	X	X	-	-	X	-	-	-	-	-	-	X	X	X	X
		20	X	W	W	W	W	X	X	X	X	X	X	-	X	X	X	-	-	X	-	-	X	X	X	X	X	X	X	X
		25	X	W	W	W	W	X	X	X	X	X	X	X	X	X	X	X	X	X	X	X	-	-	X	X	X	X	X	X
	40	32	X	W	W	W	W	X	X	X	X	X	X	X	X	X	X	X	X	X	X	X	-	-	-	-	X	X	X	X
		40	X	W	W	W	W	X	X	X	X	X	X	X	X	X	X	X	X	X	X	X	-	-	X	X	X	X	X	X
	50	50	X	W	W	W	W	X	X	X	X	X	X	X	X	X	X	X	X	X	X	X	-	-	X	X	X	X	X	X

X = Standard W = Welded construction MG = diaphragm size

Overview of valve bodies for GEMÜ 601, 602, 612, 673

Type			Clamps					Flanges									
	Connection code		80	82	88	8A	8E	8				38		39			
	Material code		40	40	40	40	40	17	18	34	40	17	18	17	18	34	40
	MG	DN															
GEMÜ 601/602	8	6	-	K	-	K	-	-	-	-	-	-	-	-	-	-	-
		8	K	K	-	K	-	-	-	-	-	-	-	-	-	-	-
		10	K	-	-	W	-	-	-	-	-	-	-	-	-	-	-
		15	K	-	W	-	-	-	-	-	-	-	-	-	-	-	-
GEMÜ 612	10	10	-	K	-	K	-	-	-	-	-	-	-	-	-	-	-
		15	K	W	K	K	-	-	-	-	-	-	-	-	-	-	-
		20	K	-	K	-	-	-	-	-	-	-	-	-	-	-	-
GEMÜ 673	25	15	-	W	-	K	-	X	X	W	W	-	-	X	X	W	W
		20	K	K	K	K	-	X	X	W	W	X	X	X	X	W	W
		25	K	K	K	K	K	X	X	W	W	X	X	X	X	W	W
	40	32	-	W	-	K	K	X	X	W	W	-	-	X	X	W	W
		40	K	W	K	K	K	X	X	W	W	X	X	X	X	W	W
	50	50	K	W	K	K	K	X	X	W	W	X	X	X	X	W	W

X = Standard
K = Connections completely machined (not welded) in material code 40
W = Welded construction MG = diaphragm size

Connection code 38 / Mateial code 18 on request
Availability of material code 32: same as code 34, availability of material code 42: same as code 40

Distributed by:

Tri-Canada

1000 Edgeley Blvd. #2, Vaughan, ON L4K 4V4
Tel: 905.677.9000 • Toll Free: 1.800.486.7863
www.tricanada.com

Should there be any doubts or misunderstandings, the German version of this data sheet is the authoritative document!